ENAPART

93 S Railroad Avenue Unit C
Bergenfield NJ 07621 USA
www.enapart.com
sales@enapart.com

Friedrich-Ebert-Anlage 36, 60325
Frankfurt am Main, Germany
www.enapart.de
anfrage@enapart.de

〒584-0023　大阪府富田林市若松町
東2丁目2番16号
www.enapart.co.jp
sales@enapart.co.jp

Via del Canneto 35,
Borgosatollo, Brescia - Italia
www.enapart.it
vendite@enapart.it

4 boulevard Carnot, 95400
villiers-le-bel, Paris, France
www.enapart.fr
sales@enapart.fr

PLAZA NUESTRA SEÑORA DE LAS
NIEVES 12 ,LOCAL ,50012,ZARAGOZA
www.enapart.es
ventas@enapart.es

Barbaros Mah. Ihlamur Bul. Ağaoğlu
My Newwork No:3/15 Ataşehir / İstanbul
www.enapart.net
satis@enapart.net

65049, ОДЕСА, ВУЛИЦЯ ІВАНА
ФРАНКА, БУДИНОК 55, ПОВЕРХ 3
www.enapart.com.ua
sales@enapart.com.ua

Складова база „Онгъл“, Склад А2, п.к.
4006, гр. Пловдив, България
www.enapart.bg
sales@enapart.bg

PRIVADA 10 B SUR #3908 COL.
ANZUREZ, C.P. 72530, PUEBLA,PUE
www.enapart.com.mx
sales@enapart.com.mx

MUNICIPIUL BUCUREŞTI, SECTOR 3,
B-DUL BASARABIA, NR.250, CORP P+5
www.enapart.ro
sales@enapart.ro

3 Austin Mews, High Street, Hemel
Hempstead, HP1 3AF , United Kingdom
www.enapart.co.uk
sales@enapart.co.uk

Magnetic
Front Mount Cylinder "MF"

MODEL	TYPE	STANDARD STROKES	"A"	PISTON AREA
LS	_,D	5mm - 100mm	33,5(1.32")	PUSH 19,63 cm^2 (3.04 in^2)
LE	_	5mm - 100mm	43,5(1.72")	
LH	_	5mm - 100mm	48,5(1.91")	PULL 17,62 cm^2 (2.73 in^2)
LH	D	5mm - 100mm	53,5(2.11")	
LS	S,R	5mm - 25mm	53,5(2.11")	
LS	S,R	26mm - 50mm	63,5(2.50")	

	Standard Threads	"EM" Option
"B"	G1/8 PORT	1/8-27
"C"	M10X1,5	3/8-24
"D"	M8X1,25	5/16-18

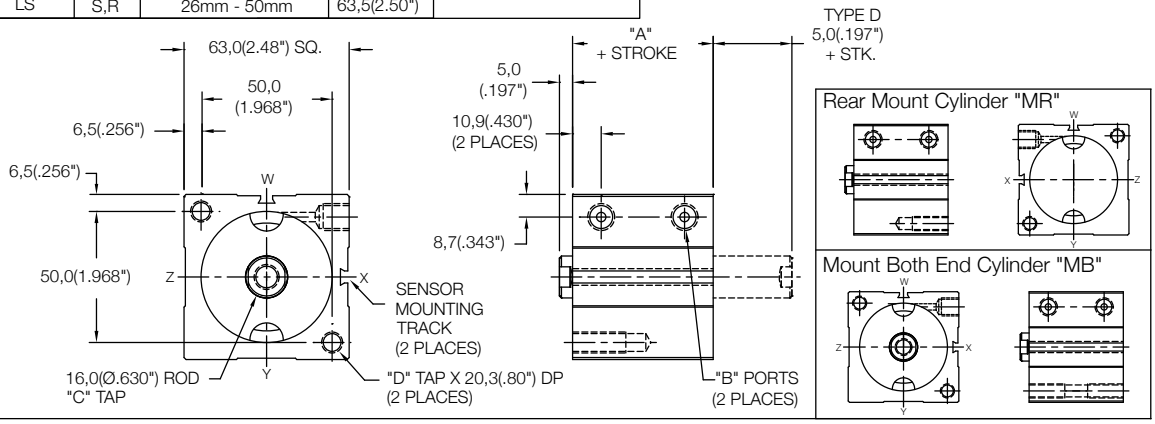

Magnetic
Thru Mount Cylinder "MT"

MODEL	TYPE	STANDARD STROKES	"A"	PISTON AREA
LS	_,D	5mm - 35mm	33,5(1.32")	PUSH 19,63 cm^2 (3.04 in^2)
LE	_	5mm - 25mm	43,5(1.72")	
LH	_	5mm - 20mm	48,5(1.91")	PULL 17,62 cm^2 (2.73 in^2)
LH	D	5mm - 15mm	53,5(2.11")	
LS	S,R	5mm - 15mm	53,5(2.11")	

	Standard Threads	"EM" Option
"B"	G1/8 PORT	1/8-27
"C"	M10X1,5	3/8-24

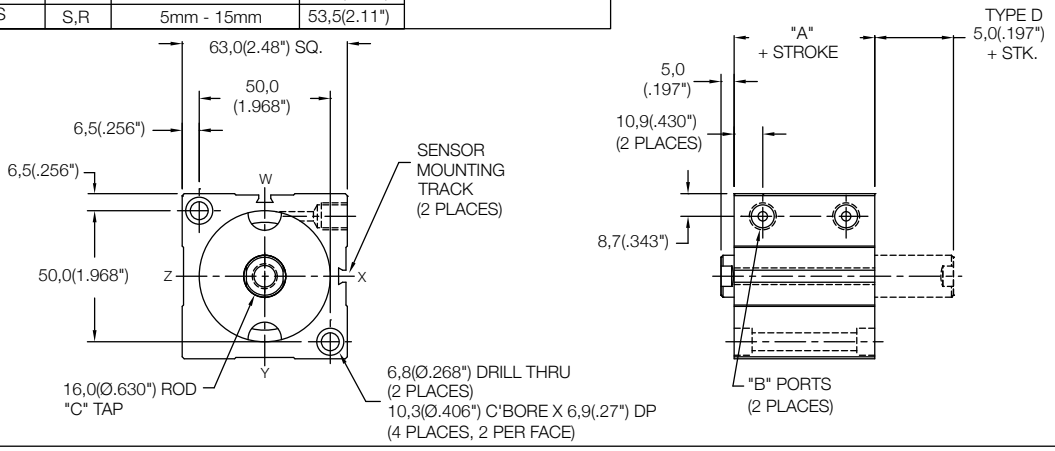

☐ - 50 X ☐ ☐ ☐ M - ☐ ☐ ☐

MODEL: LS, LE, LH

BORE: 50

STROKE: 5mm - 100mm STROKE (SEE STROKE RANGE)

TYPE:
- BLANK - NO CODE, DOUBLE ACTING, SINGLE ROD
- D - DOUBLE ACTING, DOUBLE ROD
- S - SINGLE ACTING, SPRING RETRACT
- R - SINGLE ACTING, SPRING EXTEND

MOUNTING:
- MT - THRU MOUNT
- MF - FRONT MOUNT
- MR - REAR MOUNT
- MB - BOTH END MOUNTS
- FF - FRONT FLANGE
- FR - REAR FLANGE
- (FOR FLANGES SEE PAGE 92)
- PR - REAR PIVOT
- PL - LONG PIVOT
- (FOR PIVOTS SEE PAGE 94)

MAGNETIC: M

OPTIONS:
- EM - INCH THREADS & PORT OPTIONS
- HS - HIGH TEMPERATURE SEALS OPTION: AVAILABLE ON LE AND LH MODELS ONLY (SEE PAGE 97)
- PE - PORT ENLARGEMENT (AVAILABLE W/ "EM" OPTION ONLY = 1/4-18 NPT PORTS)
- RE - ROD EYE (SEE PAGE 96)
- RS - MALE STUD FOR ROD END (SEE PAGE 96)
- RF, RH, RN, RT, RV, RY - ROD EXTENSIONS (SEE PAGE 96)
- SH - HYDRAULIC OPTION (35 BAR 500 PSI) (SEE PAGE 97)
- UB, UF, UR - URETHANE SHOCK PAD OPTION (SEE PAGE 97)

SENSORS SOLD SEPARATELY
SKS, SKP, SCS, SCP - SOLID STATE
LIMIT SENSORS (SEE PAGE 54)

Magnetic
Side Mount Cylinder "MS"

MODEL	TYPE	STANDARD STROKES	"A"	PISTON AREA
LS	_,D	5mm - 15mm	33,5(1.32")	PUSH 19,63 cm^2 (3.04 in^2)
LE	_	5mm	43,5(1.72")	PULL 17,62 cm^2 (2.73 in^2)

	Standard Threads	"EM" Option
"B"	G1/8 PORT	1/8-27
"C"	M10X1,5	3/8-24
"D"	M8X1,25	5/16-18

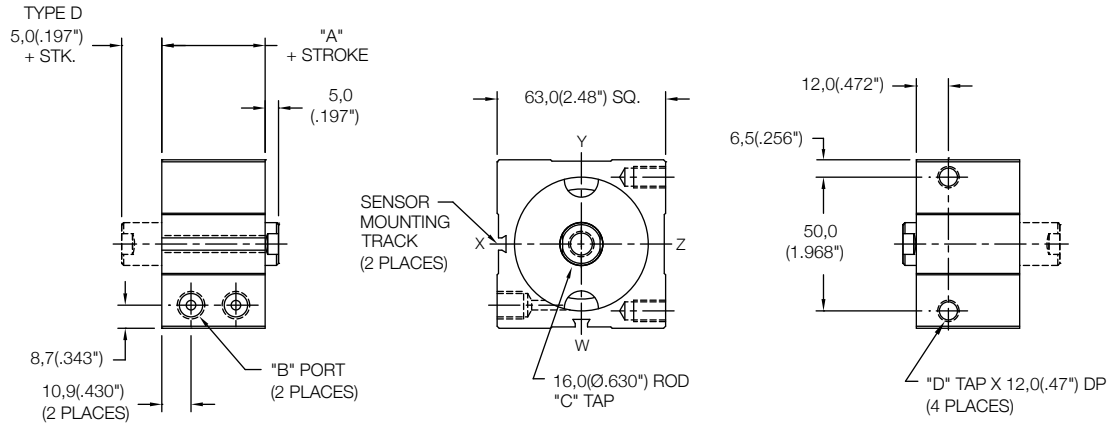

Magnetic
Side Mount Cylinder "MS"

MODEL	TYPE	STANDARD STROKES	"A"	PISTON AREA
LS	_,D	20mm - 100mm	33,5(1.32")	PUSH 19,63 cm^2 (3.04 in^2)
LE	_	10mm - 100mm	43,5(1.72")	
LH	_	5mm - 100mm	48,5(1.91")	PULL 17,62 cm^2 (2.73 in^2)
LH	D	5mm - 100mm	53,5(2.11")	
LS	S,R	5mm - 25mm	53,5(2.11")	
LS	S,R	26mm - 50mm	63,5(2.50")	

	Standard Threads	"EM" Option
"B"	G1/8 PORT	1/8-27
"C"	M10X1,5	3/8-24
"D"	M8X1,25	5/16-18

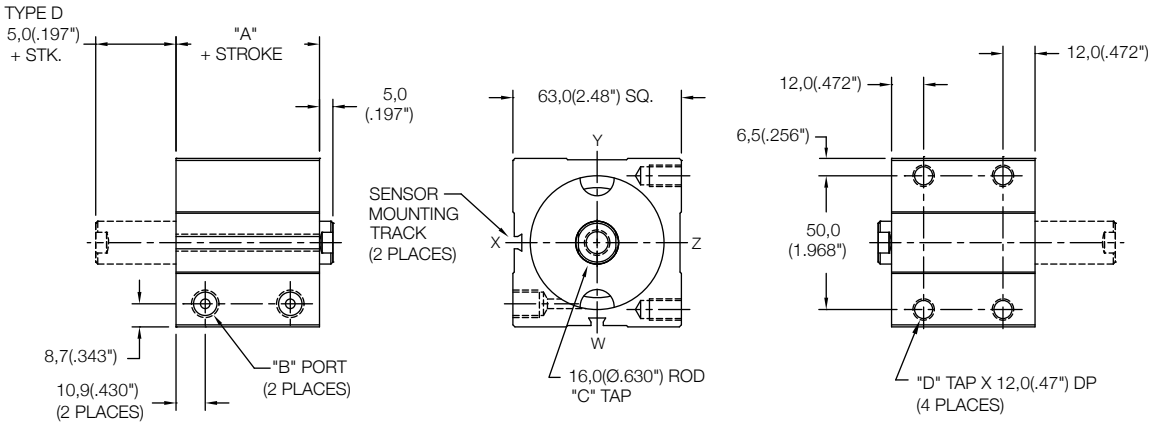

MODEL	BORE	STROKE	TYPE	MOUNTING	MAGNETIC	OPTIONS
☐	50	X ☐	☐	☐	M	☐ ☐ ☐

SENSORS SOLD SEPARATELY
SKS, SKP, SCS, SCP - SOLID STATE
LIMIT SENSORS (SEE PAGE 88)

MODEL: LS, LE, LH

BORE: 5mm - 100mm STROKE (SEE STROKE RANGE)

TYPE:
- BLANK - NO CODE, DOUBLE ACTING, SINGLE ROD
- D - DOUBLE ACTING, DOUBLE ROD
- S - SINGLE ACTING, SPRING RETRACT
- R - SINGLE ACTING, SPRING EXTEND

MOUNTING:
- MS - SIDE MOUNT
- FE - FLANGE ON END
- FS - FLANGE ON SIDE
(SEE PAGE 93)

OPTIONS:
- EM - INCH THREADS & PORT OPTIONS
- HS - HIGH TEMPERATURE SEALS OPTION: AVAILABLE ON LE AND LH MODELS ONLY (SEE PAGE 97)
- PE - PORT ENLARGEMENT (AVAILABLE W/ "EM" OPTION ONLY = 1/4-18 NPT PORTS)
- RE - ROD EYE (SEE PAGE 96)
- RS - MALE STUD FOR ROD END (SEE PAGE 96)
- RF, RH, RN, RT, RV, RY - ROD EXTENSIONS (SEE PAGE 96)
- SH - HYDRAULIC OPTION (35 BAR 500 PSI) (SEE PAGE 97)
- UB, UF, UR - URETHANE SHOCK PAD OPTION (SEE PAGE 97)

Non Magnetic
Side Mount Cylinder "MS"

MODEL	TYPE	STANDARD STROKES	"A"	PISTON AREA
LS	_,D	10mm - 20mm	28,5(1.12")	PUSH 19,63 cm^2 (3.04 in^2)
LE	_	5mm - 10mm	38,5(1.52")	
LH	_	5mm	43,5(1.72")	PULL 17,62 cm^2 (2.73 in^2)

	Standard Threads	"EM" Option
"B"	G1/8 PORT	1/8-27
"C"	M10X1,5	3/8-24
"D"	M8X1,25	5/16-18

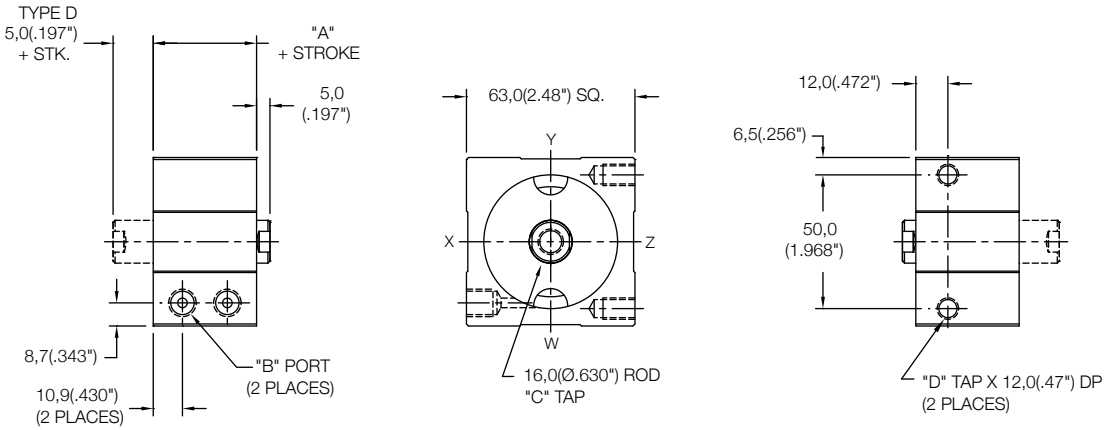

Non Magnetic
Side Mount Cylinder "MS"

MODEL	TYPE	STANDARD STROKES	"A"	PISTON AREA
LS	_,D	25mm - 100mm	28,5(1.12")	PUSH 19,63 cm^2 (3.04 in^2)
LE	_	15mm - 100mm	38,5(1.52")	
LH	_	10mm - 100mm	43,5(1.72")	PULL 17,62 cm^2 (2.73 in^2)
LH	D	5mm - 100mm	48,5(1.91")	
LS	S,R	5mm - 25mm	48,5(1.91")	
LS	S,R	26mm - 50mm	58,5(2.31")	

	Standard Threads	"EM" Option
"B"	G1/8 PORT	1/8-27
"C"	M10X1,5	3/8-24
"D"	M8X1,25	5/16-18

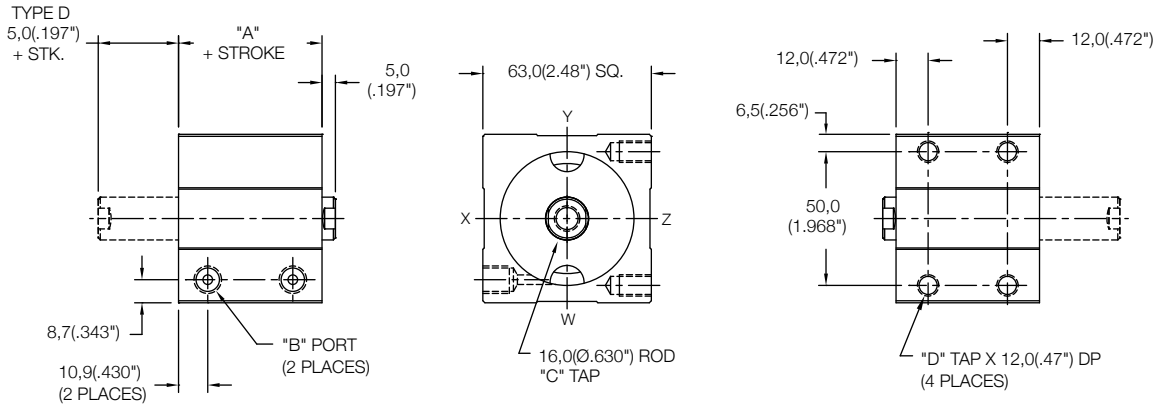

☐ - 50 X ☐ ☐ ☐ - ☐ ☐ ☐

MODEL: LS, LE, LH

BORE: 50

STROKE: 5mm - 100mm STROKE (SEE STROKE RANGE)

TYPE:
- BLANK - NO CODE, DOUBLE ACTING, SINGLE ROD
- D - DOUBLE ACTING, DOUBLE ROD
- S - SINGLE ACTING, SPRING RETRACT
- R - SINGLE ACTING, SPRING EXTEND

MOUNTING:
- MS - SIDE MOUNT
- FE - FLANGE ON END
- FS - FLANGE ON SIDE
- (SEE PAGE 93)

OPTIONS:
- EM - INCH THREADS & PORT OPTIONS
- HS - HIGH TEMPERATURE SEALS OPTION: AVAILABLE ON LE AND LH MODELS ONLY (SEE PAGE 97)
- PE - PORT ENLARGEMENT (AVAILABLE W/ "EM" OPTION ONLY = 1/4-18 NPT PORTS)
- RE - ROD EYE (SEE PAGE 96)
- RS - MALE STUD FOR ROD END (SEE PAGE 96)
- RF, RH, RN, RT, RV, RY - ROD EXTENSIONS (SEE PAGE 96)
- SH - HYDRAULIC OPTION (35 BAR 500 PSI) (SEE PAGE 97)
- UB, UF, UR - URETHANE SHOCK PAD OPTION (SEE PAGE 97)

Non Magnetic
Front Mount Cylinder "MF"

MODEL	TYPE	STANDARD STROKES	"A"	PISTON AREA
LS	_,D	10mm - 100mm	32,0(1.26")	PUSH 31,17 cm^2 (4.83 in^2)
LE	_	5mm - 100mm	42,0(1.66")	
LH	_,D	5mm - 100mm	52,0(2.05")	PULL 28,03 cm^2 (4.34 in^2)

	Standard Threads	"EM" Option
"B"	G1/8 PORT	1/8-27
"C"	M12X1,75	1/2-13
"D"	M10X1,5	3/8-24

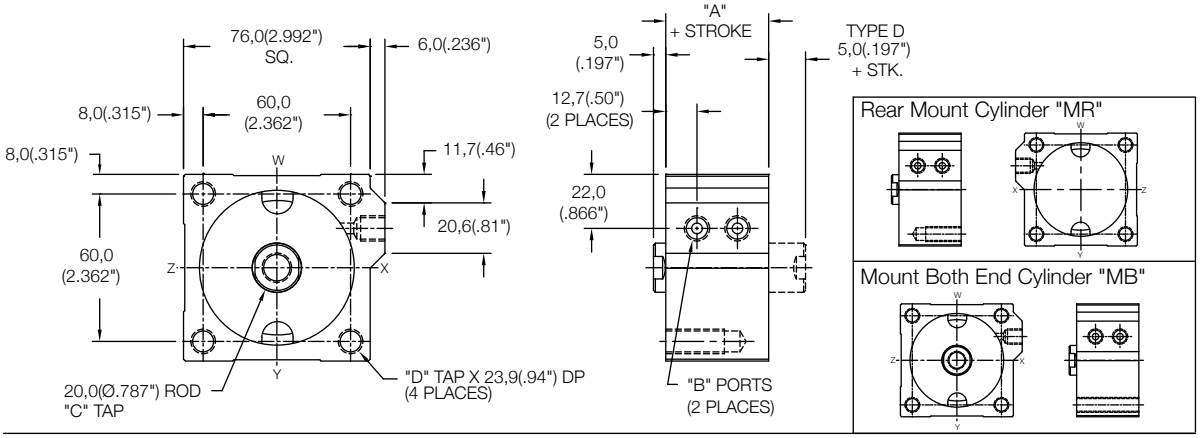

Non Magnetic
Thru Mount Cylinder "MT"

MODEL	TYPE	STANDARD STROKES	"A"	PISTON AREA
LS	_,D	10mm - 40mm	32,0(1.26")	PUSH 31,17 cm^2 (4.83 in^2)
LE	_	5mm - 30mm	42,0(1.66")	
LH	_,D	5mm - 20mm	52,0(2.05")	PULL 28,03 cm^2 (4.34 in^2)

	Standard Threads	"EM" Option
"B"	G1/8 PORT	1/8-27
"C"	M12X1,75	1/2-13

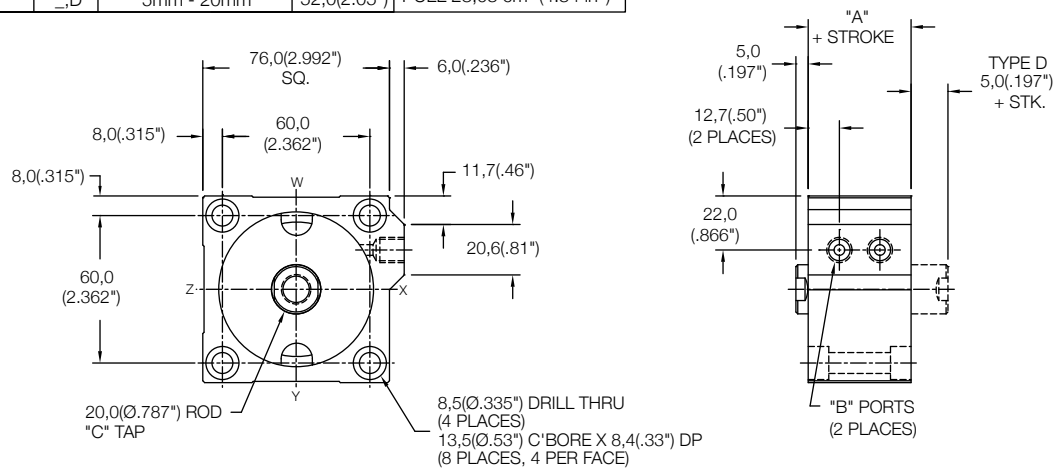

☐ - 63 X ☐ ☐ ☐ - ☐ ☐ ☐

MODEL: LS, LE, LH

BORE: 63

STROKE: 5mm - 100mm STROKE (SEE STROKE RANGE)

TYPE:
- BLANK - NO CODE, DOUBLE ACTING, SINGLE ROD
- D - DOUBLE ACTING, DOUBLE ROD

MOUNTING:
- MT - THRU MOUNT
- MF - FRONT MOUNT
- MR - REAR MOUNT
- MB - BOTH END MOUNTS
- FF - FRONT FLANGE
- FR - REAR FLANGE
- (FOR FLANGES SEE PAGE 92)
- PR - REAR PIVOT
- PL - LONG PIVOT
- (FOR PIVOTS SEE PAGE 94)

OPTIONS:
- EM - INCH THREADS & PORT OPTIONS
- HS - HIGH TEMPERATURE SEALS OPTION: AVAILABLE ON LE AND LH MODELS ONLY (SEE PAGE 97)
- PE - PORT ENLARGEMENT (AVAILABLE W/ "EM" OPTION ONLY = 1/4-18 NPT PORTS)
- RE - ROD EYE (SEE PAGE 96)
- RS - MALE STUD FOR ROD END (SEE PAGE 96)
- RF, RH, RN, RT, RV, RY - ROD EXTENSIONS (SEE PAGE 96)
- SH - HYDRAULIC OPTION (35 BAR 500 PSI) (SEE PAGE 97)
- UB, UF, UR - URETHANE SHOCK PAD OPTION (SEE PAGE 97)

Magnetic
Front Mount Cylinder "MF"

MODEL	TYPE	STANDARD STROKES	"A"	PISTON AREA
LS	_,D	10mm - 100mm	37,0(1.46")	PUSH 31,17 cm^2 (4.83 in^2)
LE	_	5mm - 100mm	47,0(1.85")	
LH	_,D	5mm - 100mm	57,0(2.25")	PULL 28,03 cm^2 (4.34 in^2)

	Standard Threads	"EM" Option
"B"	G1/8 PORT	1/8-27
"C"	M12X1,75	1/2-13
"D"	M10X1,5	3/8-24

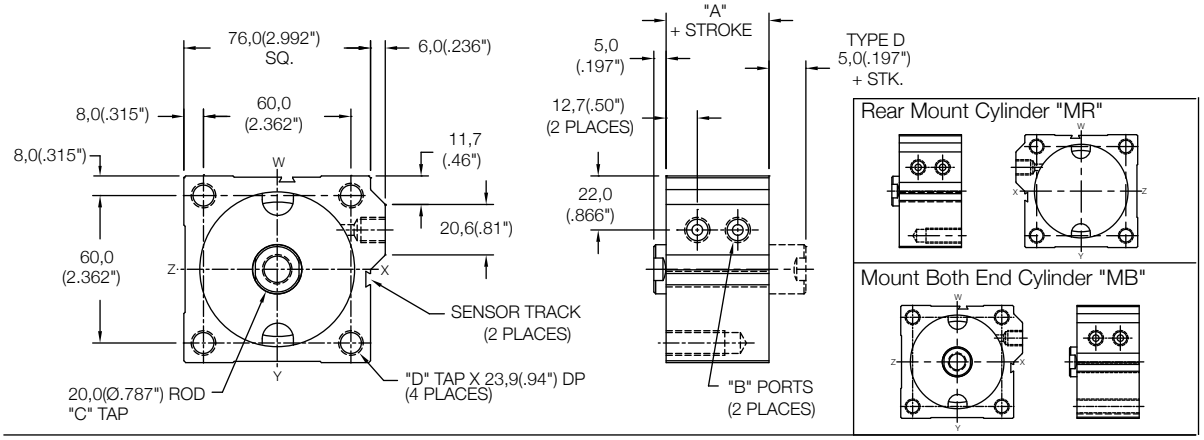

Magnetic
Thru Mount Cylinder "MT"

MODEL	TYPE	STANDARD STROKES	"A"	PISTON AREA
LS	_,D	10mm - 35mm	37,0(1.46")	PUSH 31,17 cm^2 (4.83 in^2)
LE	_	5mm - 25mm	47,0(1.85")	
LH	_,D	5mm - 15mm	57,0(2.25")	PULL 28,03 cm^2 (4.34 in^2)

	Standard Threads	"EM" Option
"B"	G1/8 PORT	1/8-27
"C"	M12X1,75	1/2-13

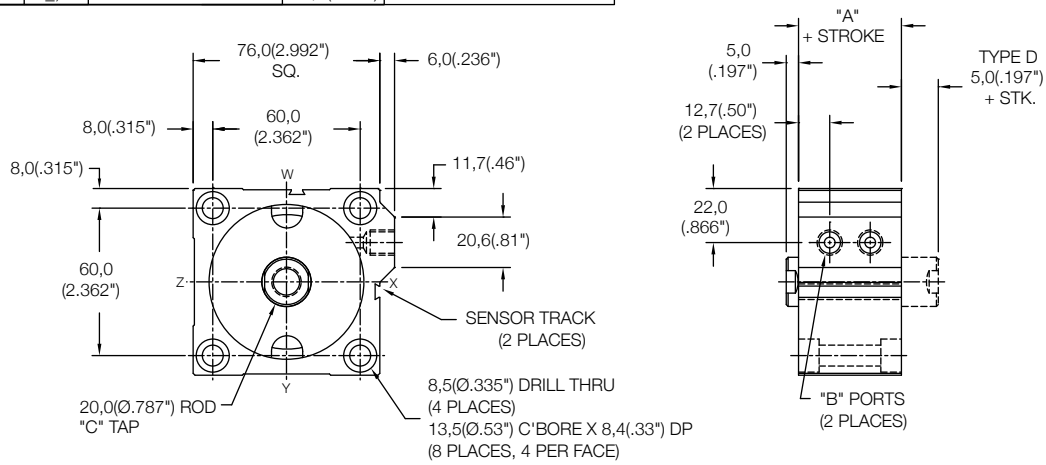

[ ] – [63] X [ ] [ ] [ ] [M] – [ ] [ ] [ ]

MODEL: LS, LE, LH

BORE: 63

STROKE: 5mm - 100mm STROKE (SEE STROKE RANGE)

TYPE:
- BLANK - NO CODE, DOUBLE ACTING, SINGLE ROD
- D - DOUBLE ACTING, DOUBLE ROD

MOUNTING:
- MT - THRU MOUNT
- MF - FRONT MOUNT
- MR - REAR MOUNT
- MB - BOTH END MOUNTS
- FF - FRONT FLANGE
- FR - REAR FLANGE
- (FOR FLANGES SEE PAGE 92)
- PR - REAR PIVOT
- PL - LONG PIVOT
- (FOR PIVOTS SEE PAGE 94)

MAGNETIC: M

OPTIONS:
- EM - INCH THREADS & PORT OPTIONS
- HS - HIGH TEMPERATURE SEALS OPTION: AVAILABLE ON LE AND LH MODELS ONLY (SEE PAGE 97)
- PE - PORT ENLARGEMENT (AVAILABLE W/ "EM" OPTION ONLY = 1/4-18 NPT PORTS)
- RE - ROD EYE (SEE PAGE 96)
- RS - MALE STUD FOR ROD END (SEE PAGE 96)
- RF, RH, RN, RT, RV, RY - ROD EXTENSIONS (SEE PAGE 96)
- SH - HYDRAULIC OPTION (35 BAR 500 PSI) (SEE PAGE 97)
- UB, UF, UR - URETHANE SHOCK PAD OPTION (SEE PAGE 97)

SENSORS SOLD SEPARATELY
SKS, SKP, SCS, SCP - SOLID STATE LIMIT SENSORS (SEE PAGE 88)

Magnetic
Side Mount Cylinder "MS"

MODEL	TYPE	STANDARD STROKES	"A"	PISTON AREA
LS	_,D	10mm - 15mm	37,0(1.46")	PUSH 31,17 cm^2 (4.83 in^2)
LE	_	5mm	47,0(1.85")	PULL 28,03 cm^2 (4.34 in^2)

	Standard Threads	"EM" Option
"B"	G1/8 PORT	1/8-27
"C"	M12X1,75	1/2-13
"D"	M8X1,25	5/16-18

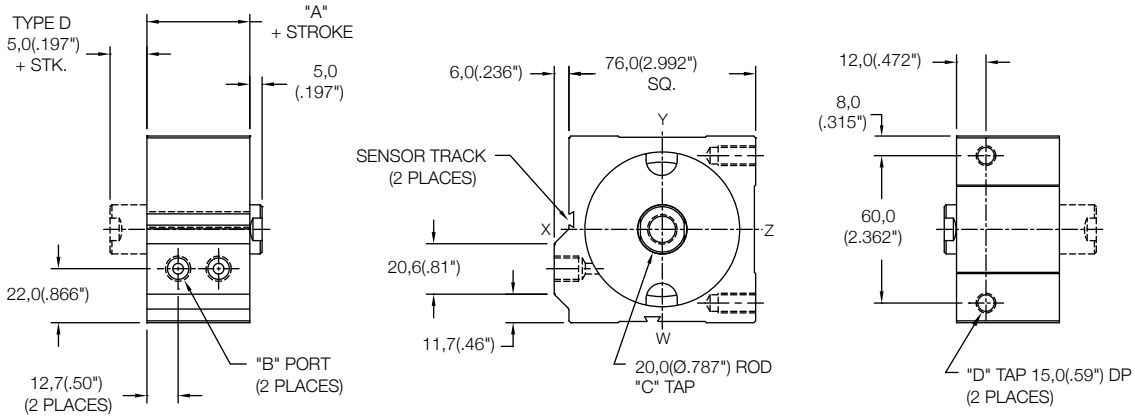

Magnetic
Side Mount Cylinder "MS"

MODEL	TYPE	STANDARD STROKES	"A"	PISTON AREA
LS	_,D	20mm - 100mm	37,0(1.46")	PUSH 31,17 cm^2 (4.83 in^2)
LE	_	10mm - 100mm	47,0(1.85")	
LH	_,D	5mm - 100mm	57,0(2.25")	PULL 28,03 cm^2 (4.34 in^2)

	Standard Threads	"EM" Option
"B"	G1/8 PORT	1/8-27
"C"	M12X1,75	1/2-13
"D"	M8X1,25	5/16-18

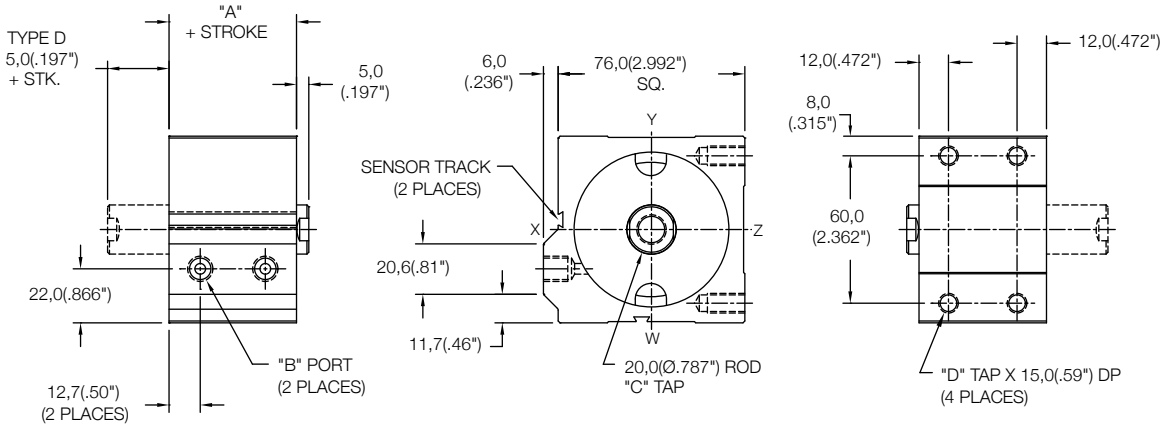

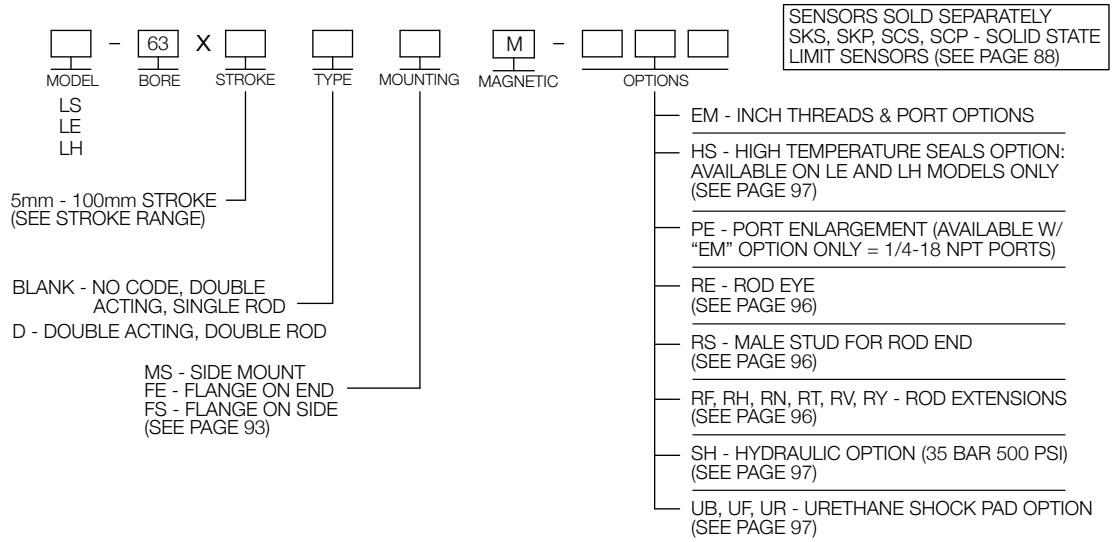

Non Magnetic
Side Mount Cylinder "MS"

MODEL	TYPE	STANDARD STROKES	"A"	PISTON AREA
LS	_,D	10mm - 20mm	32,0(1.26")	PUSH 31,17 cm^2 (4.83 in^2)
LE	_	5mm - 10mm	42,0(1.66")	PULL 28,03 cm^2 (4.34 in^2)

	Standard Threads	"EM" Option
"B"	G1/8 PORT	1/8-27
"C"	M12X1,75	1/2-13
"D"	M8X1,25	5/16-18

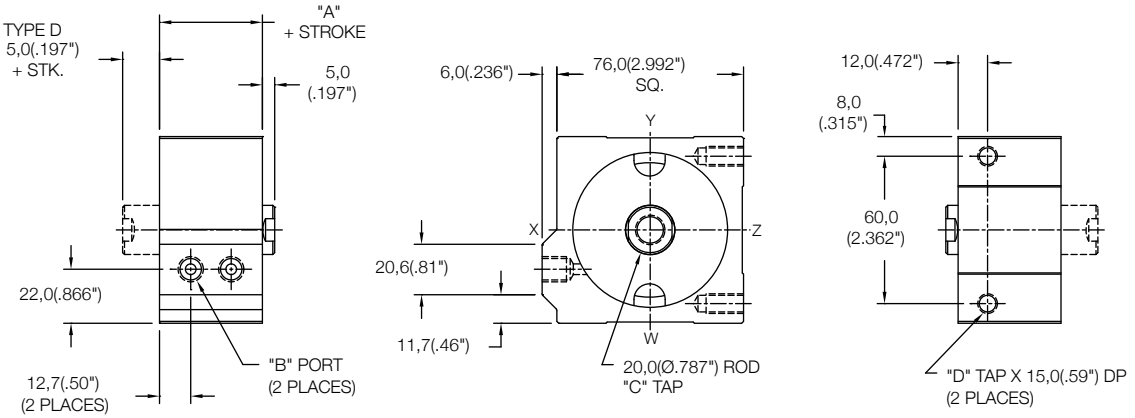

Non Magnetic
Side Mount Cylinder "MS"

MODEL	TYPE	STANDARD STROKES	"A"	PISTON AREA
LS	_,D	25mm - 100mm	32,0(1.26")	PUSH 31,17 cm^2 (4.83 in^2)
LE	_	15mm - 100mm	42,0(1.66")	
LH	_,D	5mm - 100mm	52,0(2.05")	PULL 28,03 cm^2 (4.34 in^2)

	Standard Threads	"EM" Option
"B"	G1/8 PORT	1/8-27
"C"	M12X1,75	1/2-13
"D"	M8X1,25	5/16-18

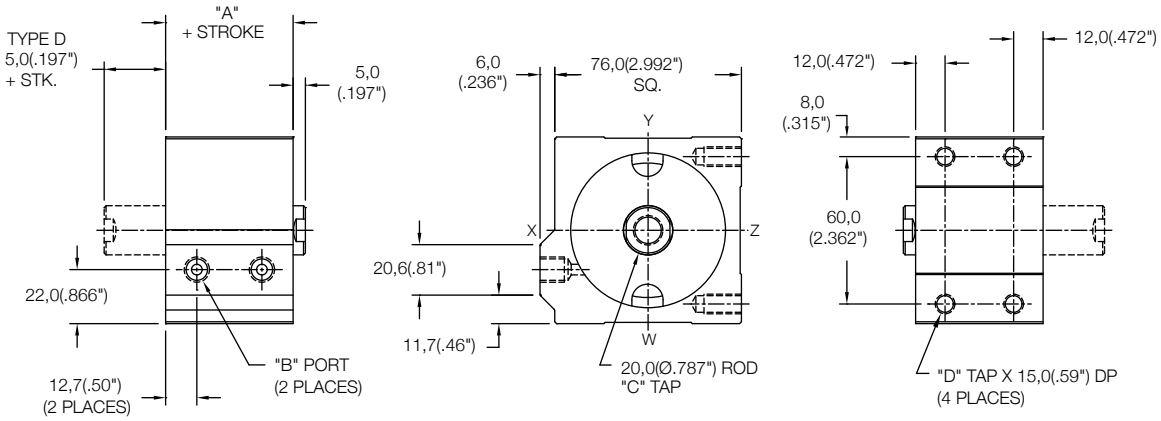

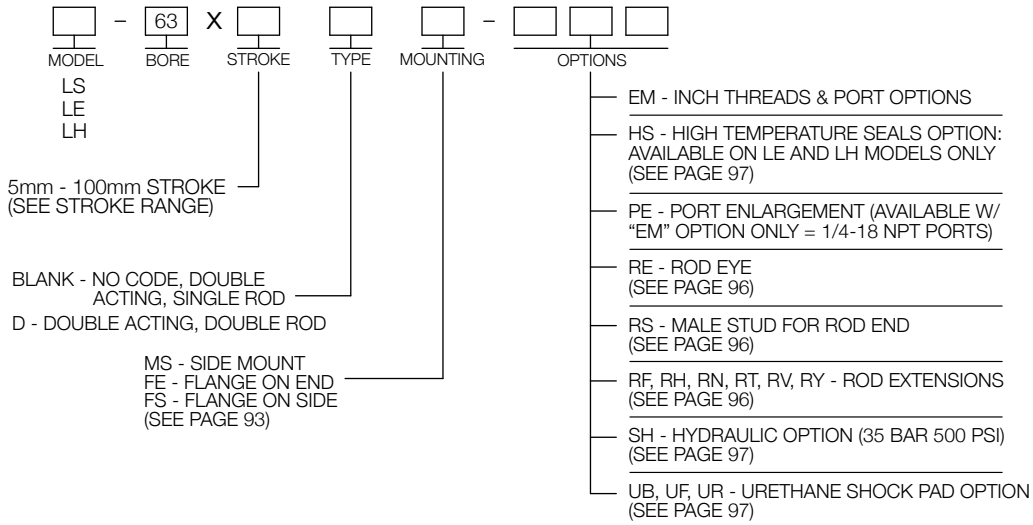

Non Magnetic
Front Mount Cylinder "MF"

MODEL	TYPE	STANDARD STROKES	"A"	PISTON AREA
LS	_,D	10mm - 100mm	38,0(1.50")	PUSH 45,6 cm^2 (7.07 in^2)
LE	_	5mm - 100mm	48,0(1.89")	
LH	_,D	5mm - 100mm	58,0(2.28")	PULL 42,46 cm^2 (6.59 in^2)

	Standard Threads	"EM" Option
"B"	G1/8 PORT	1/8-27
"C"	M12X1,75	1/2-13
"D"	M10X1,5	3/8-24

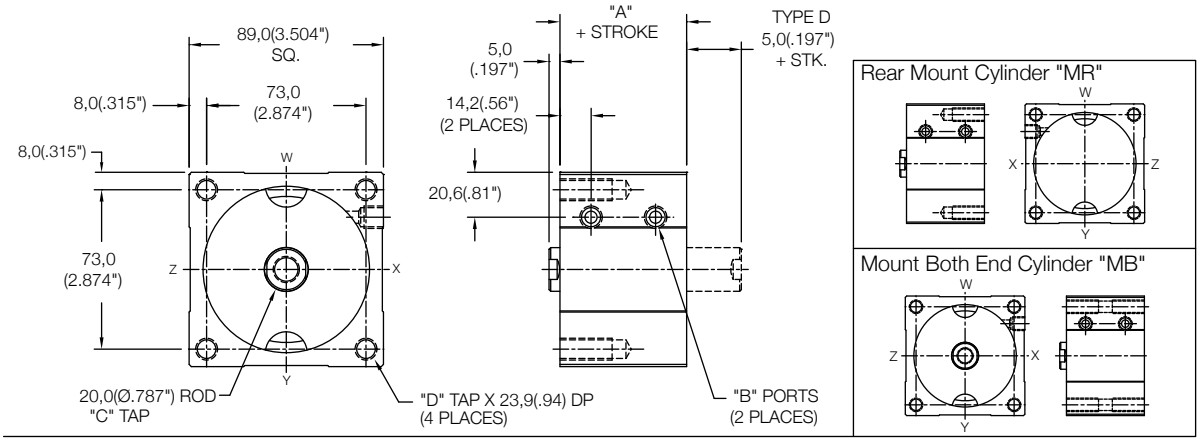

Non Magnetic
Thru Mount Cylinder "MT"

MODEL	TYPE	STANDARD STROKES	"A"	PISTON AREA
LS	_,D	10mm - 40mm	38,0(1.50")	PUSH 45,6 cm^2 (7.07 in^2)
LE	_	5mm - 30mm	48,0(1.89")	
LH	_,D	5mm - 20mm	58,0(2.28")	PULL 42,46 cm^2 (6.59 in^2)

	Standard Threads	"EM" Option
"B"	G1/8 PORT	1/8-27
"C"	M12X1,75	1/2-13

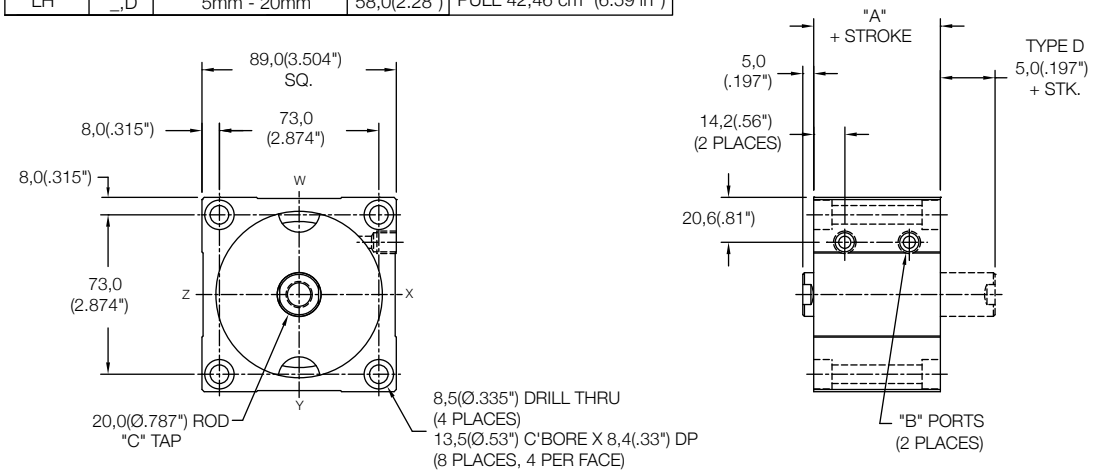

[ ] - [76] X [ ] [ ] [ ] - [ ] [ ] [ ]

MODEL: LS, LE, LH

BORE: 76

STROKE: 5mm - 100mm STROKE (SEE STROKE RANGE)

TYPE:
- BLANK - NO CODE, DOUBLE ACTING, SINGLE ROD
- D - DOUBLE ACTING, DOUBLE ROD

MOUNTING:
- MT - THRU MOUNT
- MF - FRONT MOUNT
- MR - REAR MOUNT
- MB - BOTH END MOUNTS
- FF - FRONT FLANGE
- FR - REAR FLANGE
- (FOR FLANGES SEE PAGE 92)
- PR - REAR PIVOT
- PL - LONG PIVOT
- (FOR PIVOTS SEE PAGE 94)

OPTIONS:
- EM - INCH THREADS & PORT OPTIONS
- HS - HIGH TEMPERATURE SEALS OPTION: AVAILABLE ON LE AND LH MODELS ONLY (SEE PAGE 97)
- PE - PORT ENLARGEMENT (AVAILABLE W/ "EM" OPTION ONLY = 1/4-18 NPT PORTS)
- RE - ROD EYE (SEE PAGE 96)
- RS - MALE STUD FOR ROD END (SEE PAGE 96)
- RF, RH, RN, RT, RV, RY - ROD EXTENSIONS (SEE PAGE 96)
- SH - HYDRAULIC OPTION (35 BAR 500 PSI) (SEE PAGE 97)
- UB, UF, UR - URETHANE SHOCK PAD OPTION (SEE PAGE 97)

Magnetic
Front Mount Cylinder "MF"

MODEL	TYPE	STANDARD STROKES	"A"	PISTON AREA
LS	_,D	10mm - 100mm	43,0(1.69")	PUSH 45,6 cm^2 (7.07 in^2)
LE	_	5mm - 100mm	53,0(2.09")	
LH	_,D	5mm - 100mm	63,0(2.48")	PULL 42,46 cm^2 (6.59 in^2)

	Standard Threads	"EM" Option
"B"	G1/8 PORT	1/8-27
"C"	M12X1,75	1/2-13
"D"	M10X1,5	3/8-24

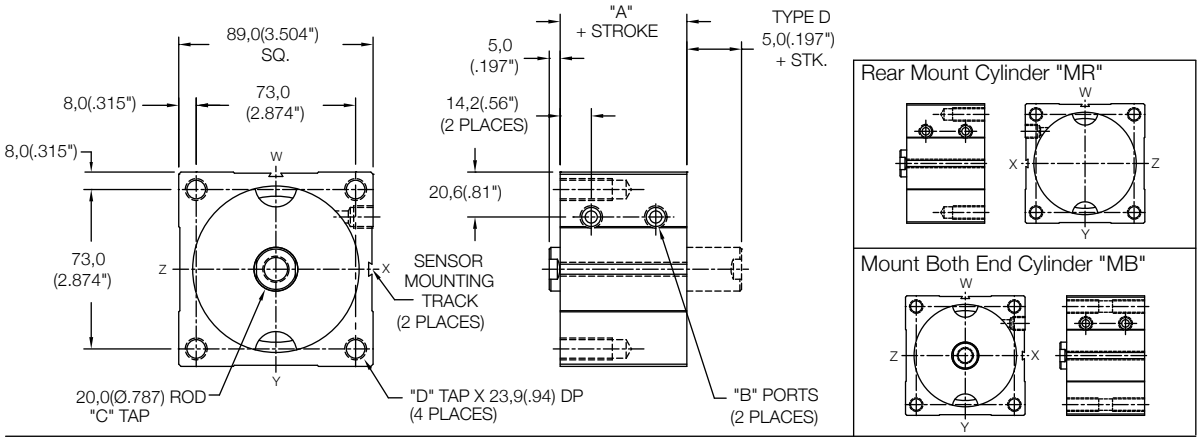

Magnetic
Thru Mount Cylinder "MT"

MODEL	TYPE	STANDARD STROKES	"A"	PISTON AREA
LS	_,D	10mm - 35mm	43,0(1.69")	PUSH 45,6 cm^2 (7.07 in^2)
LE	_	5mm - 25mm	53,0(2.09")	
LH	_,D	5mm - 15mm	63,0(2.48")	PULL 42,46 cm^2 (6.59 in^2)

	Standard Threads	"EM" Option
"B"	G1/8 PORT	1/8-27
"C"	M12X1,75	1/2-13

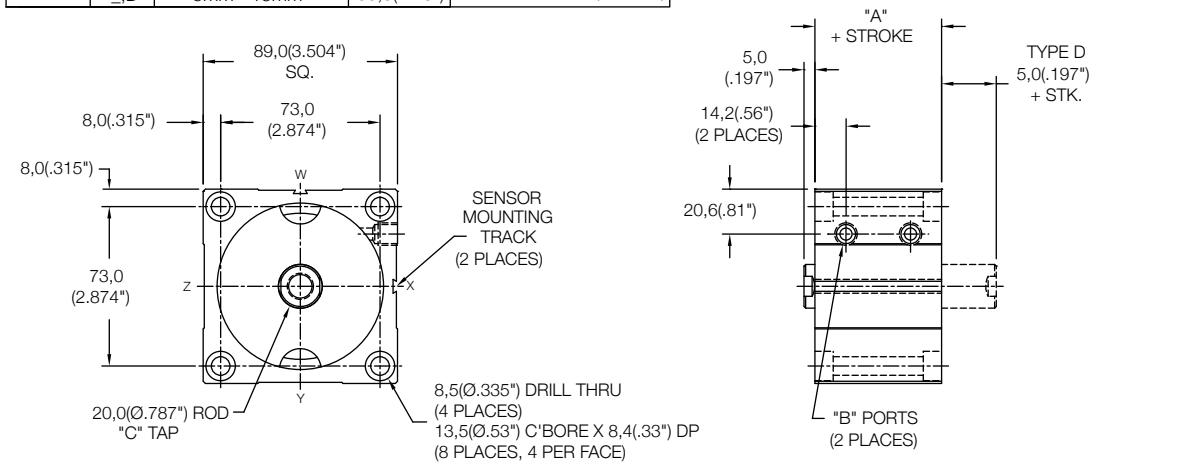

[ ] - [76] X [ ] [ ] [ ] [M] - [ ] [ ] [ ]

MODEL: LS, LE, LH

BORE: 76

STROKE: 5mm - 100mm STROKE (SEE STROKE RANGE)

TYPE:
- BLANK - NO CODE, DOUBLE ACTING, SINGLE ROD
- D - DOUBLE ACTING, DOUBLE ROD

MOUNTING:
- MT - THRU MOUNT
- MF - FRONT MOUNT
- MR - REAR MOUNT
- MB - BOTH END MOUNTS
- FF - FRONT FLANGE
- FR - REAR FLANGE
- (FOR FLANGES SEE PAGE 92)
- PR - REAR PIVOT
- PL - LONG PIVOT
- (FOR PIVOTS SEE PAGE 94)

MAGNETIC: M

OPTIONS:
- EM - INCH THREADS & PORT OPTIONS
- HS - HIGH TEMPERATURE SEALS OPTION: AVAILABLE ON LE AND LH MODELS ONLY (SEE PAGE 97)
- PE - PORT ENLARGEMENT (AVAILABLE W/ "EM" OPTION ONLY = 1/4-18 NPT PORTS)
- RE - ROD EYE (SEE PAGE 96)
- RS - MALE STUD FOR ROD END (SEE PAGE 96)
- RF, RH, RN, RT, RV, RY - ROD EXTENSIONS (SEE PAGE 96)
- SH - HYDRAULIC OPTION (35 BAR 500 PSI) (SEE PAGE 97)
- UB, UF, UR - URETHANE SHOCK PAD OPTION (SEE PAGE 97)

SENSORS SOLD SEPARATELY
SKS, SKP, SCS, SCP - SOLID STATE
LIMIT SENSORS (SEE PAGE 88)

Magnetic
Side Mount Cylinder "MS"

MODEL	TYPE	STANDARD STROKES	"A"	PISTON AREA
LS	_,D	10mm - 15mm	43,0(1.69")	PUSH 45,6 cm^2 (7.07 in^2)
LE	_	5mm	53,0(2.09")	PULL 42,46 cm^2 (6.59 in^2)

	Standard Threads	"EM" Option
"B"	G1/8 PORT	1/8-27
"C"	M12X1,75	1/2-13
"D"	M10X1,5	3/8-24

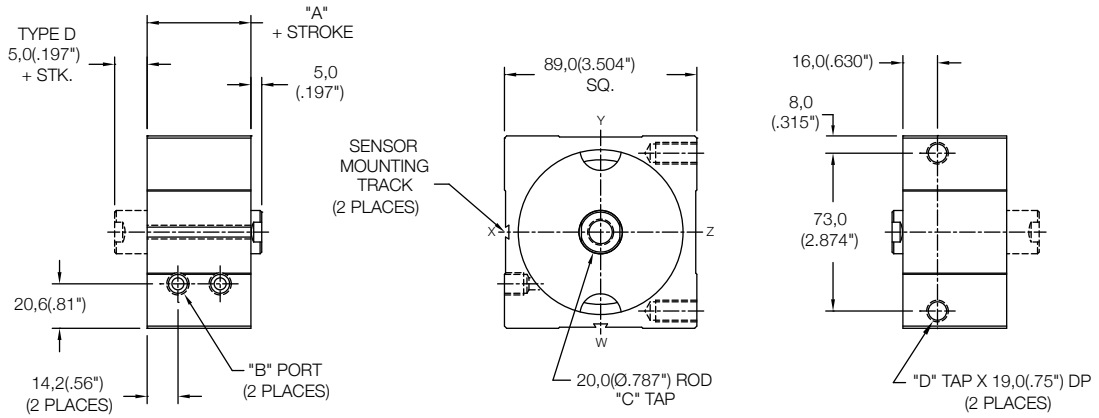

Magnetic
Side Mount Cylinder "MS"

MODEL	TYPE	STANDARD STROKES	"A"	PISTON AREA
LS	_,D	20mm - 100mm	43,0(1.69")	PUSH 45,6 cm^2 (7.07 in^2)
LE	_	10mm - 100mm	53,0(2.09")	
LH	_,D	5mm - 100mm	63,0(2.48")	PULL 42,46 cm^2 (6.59 in^2)

	Standard Threads	"EM" Option
"B"	G1/8 PORT	1/8-27
"C"	M12X1,75	1/2-13
"D"	M10X1,5	3/8-24

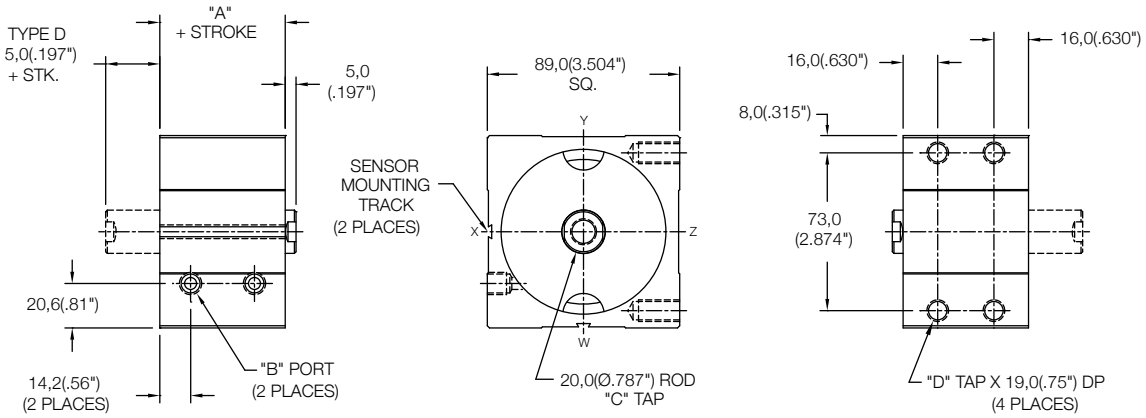

SENSORS SOLD SEPARATELY
SKS, SKP, SCS, SCP - SOLID STATE
LIMIT SENSORS (SEE PAGE 88)

[ ] - [76] X [ ] [ ] [ ] [M] - [ ] [ ] [ ]

MODEL: LS, LE, LH

BORE: 76

STROKE: 5mm - 100mm STROKE (SEE STROKE RANGE)

TYPE: BLANK - NO CODE, DOUBLE ACTING, SINGLE ROD; D - DOUBLE ACTING, DOUBLE ROD

MOUNTING: MS - SIDE MOUNT; FE - FLANGE ON END; FS - FLANGE ON SIDE (SEE PAGE 93)

MAGNETIC: M

OPTIONS:
- EM - INCH THREADS & PORT OPTIONS
- HS - HIGH TEMPERATURE SEALS OPTION: AVAILABLE ON LE AND LH MODELS ONLY (SEE PAGE 97)
- PE - PORT ENLARGEMENT (AVAILABLE W/ "EM" OPTION ONLY = 1/4-18 NPT PORTS)
- RE - ROD EYE (SEE PAGE 96)
- RS - MALE STUD FOR ROD END (SEE PAGE 96)
- RF, RH, RN, RT, RV, RY - ROD EXTENSIONS (SEE PAGE 96)
- SH - HYDRAULIC OPTION (35 BAR 500 PSI) (SEE PAGE 97)
- UB, UF, UR - URETHANE SHOCK PAD OPTION (SEE PAGE 97)

Non Magnetic
Side Mount Cylinder "MS"

MODEL	TYPE	STANDARD STROKES	"A"	PISTON AREA
LS	_,D	10mm - 20mm	38,0(1.50")	PUSH 45,6 cm^2 (7.07 in^2)
LE	_	5mm - 10mm	48,0(1.89")	PULL 42,46 cm^2 (6.59 in^2)

	Standard Threads	"EM" Option
"B"	G1/8 PORT	1/8-27
"C"	M12X1,75	1/2-13
"D"	M10X1,5	3/8-24

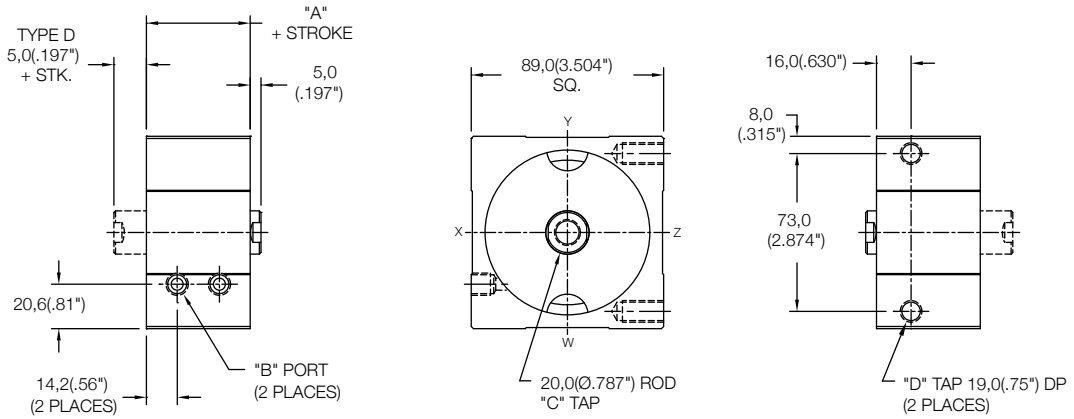

Non Magnetic
Side Mount Cylinder "MS"

MODEL	TYPE	STANDARD STROKES	"A"	PISTON AREA
LS	_,D	25mm - 100mm	38,0(1.50")	PUSH 45,6 cm^2 (7.07 in^2)
LE	_	15mm - 100mm	48,0(1.89")	PULL 42,46 cm^2 (6.59 in^2)
LH	_,D	5mm - 100mm	58,0(2.28")	

	Standard Threads	"EM" Option
"B"	G1/8 PORT	1/8-27
"C"	M12X1,75	1/2-13
"D"	M10X1,5	3/8-24

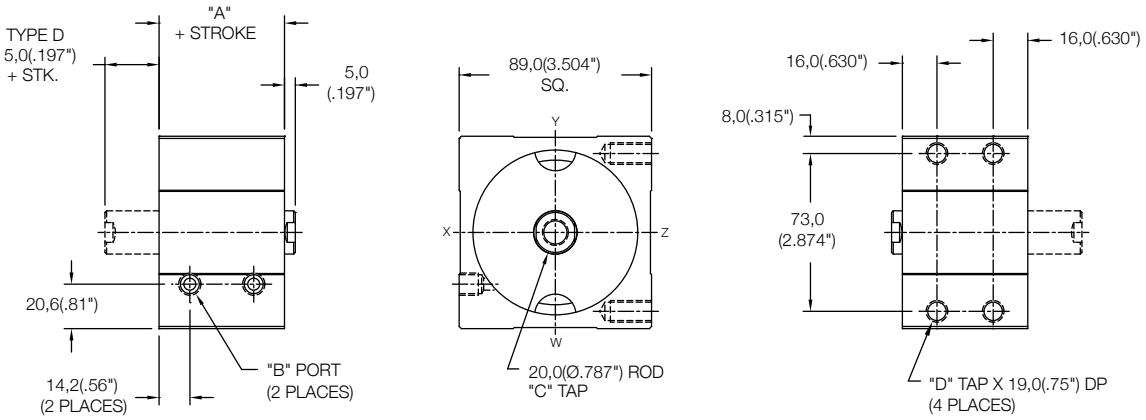

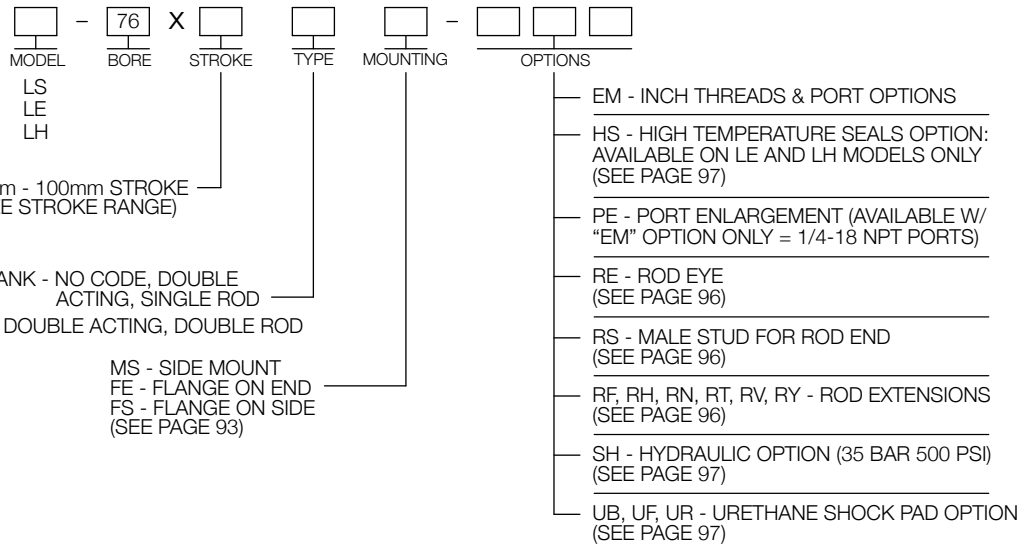

Non Magnetic
Front Mount Cylinder "MF"

MODEL	TYPE	STANDARD STROKES	"A"	PISTON AREA
LS	_,D	10mm - 100mm	41,5(1.63")	PUSH 81,07 cm^2 (12.57 in^2)
LE	_	5mm - 100mm	51,5(2.03")	
LH	_,D	5mm - 100mm	61,5(2.42")	PULL 77,93 cm^2 (12.09 in^2)

	Standard Threads	"EM" Option
"B"	G1/8 PORT	1/8-27
"C"	M12X1,75	1/2-13
"D"	M8X1,25	5/16-18

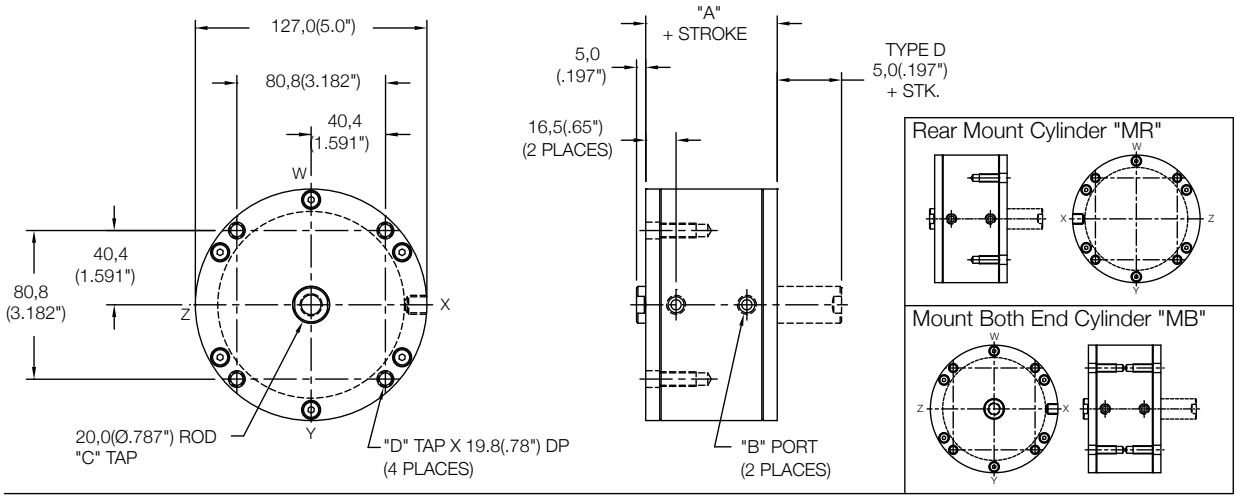

Non Magnetic
Thru Mount Cylinder "MT"

MODEL	TYPE	STANDARD STROKES	"A"	PISTON AREA
LS	_,D	10mm - 50mm	41,5(1.63")	PUSH 81,07 cm^2 (12.57 in^2)
LE	_	5mm - 40mm	51,5(2.03")	
LH	_,D	5mm - 30mm	61,5(2.42")	PULL 77,93 cm^2 (12.09 in^2)

	Standard Threads	"EM" Option
"B"	G1/8 PORT	1/8-27
"C"	M12X1,75	1/2-13

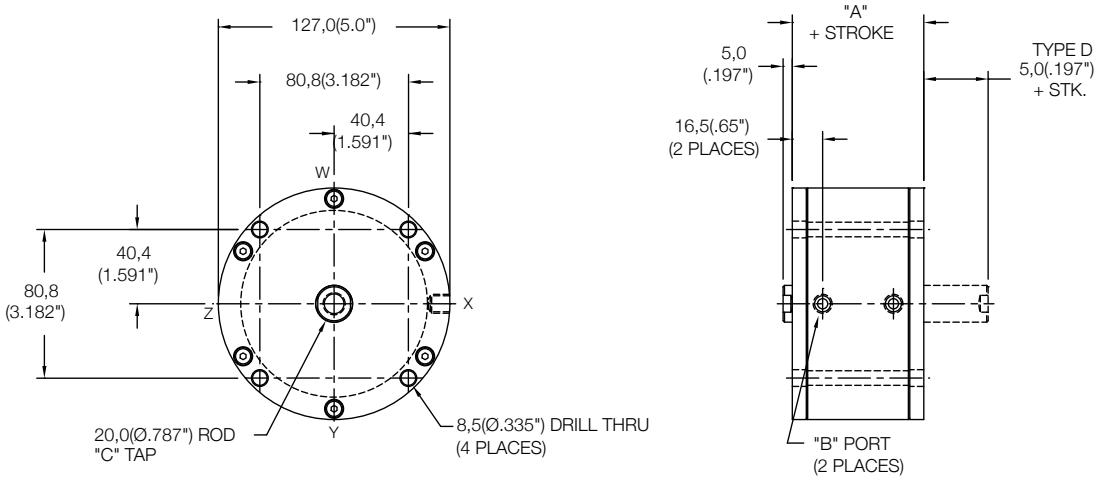

☐ - 101 X ☐ ☐ ☐ - ☐ ☐ ☐

MODEL: LS, LE, LH

BORE: 101

STROKE: 5mm - 100mm STROKE (SEE STROKE RANGE)

TYPE:
- BLANK - NO CODE, DOUBLE ACTING, SINGLE ROD
- D - DOUBLE ACTING, DOUBLE ROD

MOUNTING:
- MT - THRU MOUNT
- MF - FRONT MOUNT
- MR - REAR MOUNT
- MB - BOTH END MOUNTS
- FF - FRONT FLANGE
- FR - REAR FLANGE
- (FOR FLANGES SEE PAGE 92)

OPTIONS:
- EM - INCH THREADS & PORT OPTIONS
- HS - HIGH TEMPERATURE SEALS OPTION: AVAILABLE ON LE AND LH MODELS ONLY (SEE PAGE 97)
- PE - PORT ENLARGEMENT (AVAILABLE W/ "EM" OPTION ONLY = 1/4-18 NPT PORTS)
- RE - ROD EYE (SEE PAGE 96)
- RS - MALE STUD FOR ROD END (SEE PAGE 96)
- RF, RH, RN, RT, RV, RY - ROD EXTENSIONS (SEE PAGE 96)

Magnetic
Front Mount Cylinder "MF"

MODEL	TYPE	STANDARD STROKES	"A"	PISTON AREA
LS	_,D	10mm - 100mm	51,5(2.03")	PUSH 81,07 cm^2 (12.57 in^2)
LE	_	5mm - 100mm	61,5(2.42")	
LH	_,D	5mm - 100mm	71,5(2.82")	PULL 77,93 cm^2 (12.09 in^2)

	Standard Threads	"EM" Option
"B"	G1/8 PORT	1/8-27
"C"	M12X1,75	1/2-13
"D"	M8X1,25	5/16-18

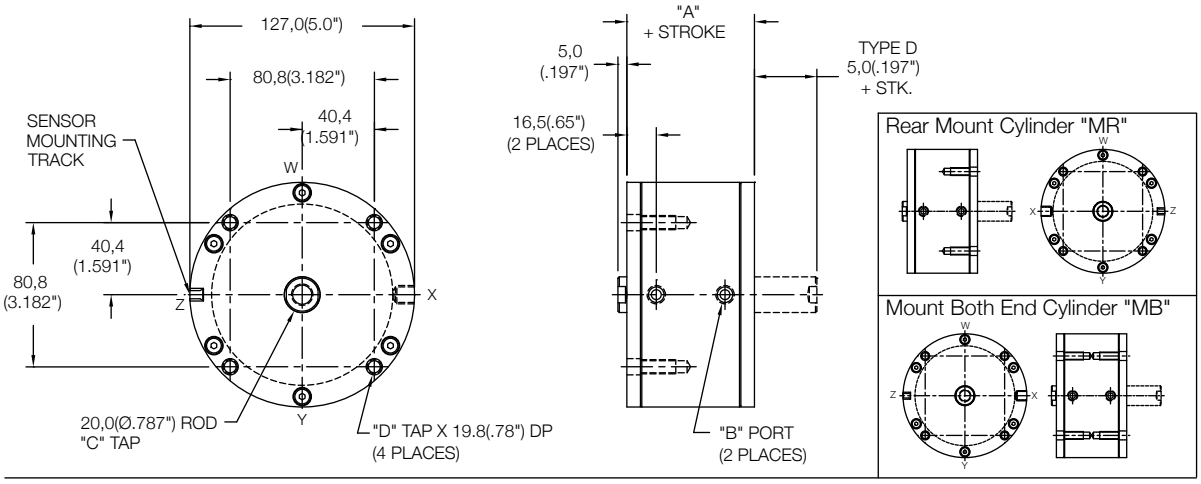

Magnetic
Thru Mount Cylinder "MT"

MODEL	TYPE	STANDARD STROKES	"A"	PISTON AREA
LS	_,D	10mm - 40mm	51,5(2.03")	PUSH 81,07 cm^2 (12.57 in^2)
LE	_	5mm - 30mm	61,5(2.42")	
LH	_,D	5mm - 20mm	71,5(2.82")	PULL 77,93 cm^2 (12.09 in^2)

	Standard Threads	"EM" Option
"B"	G1/8 PORT	1/8-27
"C"	M12X1,75	1/2-13

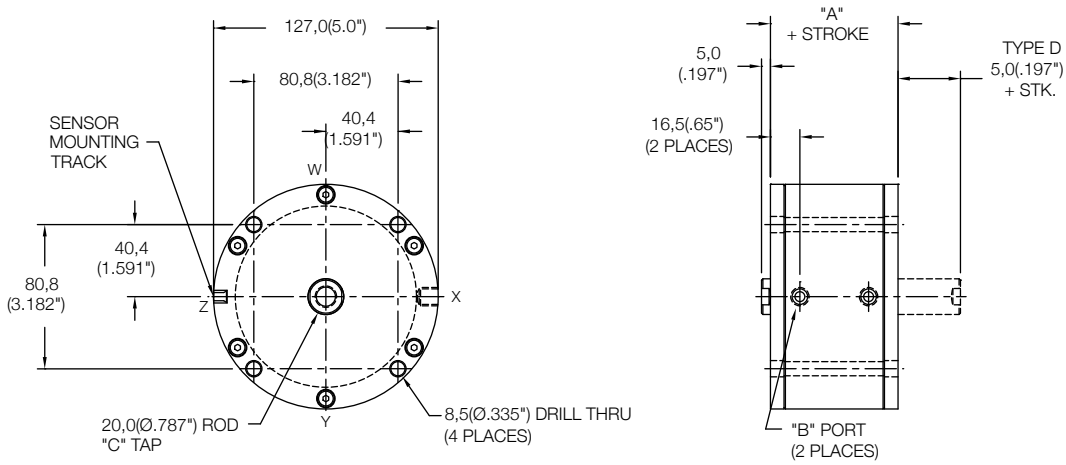

☐ - 101 X ☐ ☐ ☐ M - ☐ ☐ ☐

MODEL: LS, LE, LH

BORE

STROKE — 5mm - 100mm STROKE (SEE STROKE RANGE)

TYPE — BLANK - NO CODE, DOUBLE ACTING, SINGLE ROD; D - DOUBLE ACTING, DOUBLE ROD

MOUNTING — MT - THRU MOUNT; MF - FRONT MOUNT; MR - REAR MOUNT; MB - BOTH END MOUNTS; FF - FRONT FLANGE; FR - REAR FLANGE (FOR FLANGES SEE PAGE 92)

MAGNETIC

OPTIONS
- EM - INCH THREADS & PORT OPTIONS
- HS - HIGH TEMPERATURE SEALS OPTION: AVAILABLE ON LE AND LH MODELS ONLY (SEE PAGE 97)
- PE - PORT ENLARGEMENT (AVAILABLE W/ "EM" OPTION ONLY = 1/4-18 NPT PORTS)
- RE - ROD EYE (SEE PAGE 96)
- RS - MALE STUD FOR ROD END (SEE PAGE 96)
- RF, RH, RN, RT, RV, RY - ROD EXTENSIONS (SEE PAGE 96)

SENSORS SOLD SEPARATELY
SKS, SKP, SCS, SCP - SOLID STATE LIMIT SENSORS (SEE PAGE 88)

Non Magnetic
Front Mount Cylinder "MF"

MODEL	TYPE	STANDARD STROKES	"A"	PISTON AREA
LS	_,D	10mm - 100mm	44,5(1.75")	PUSH 126,7 cm^2 (19.6 in^2)
LE	_	5mm - 100mm	54,5(2.15")	
LH	_,D	5mm - 100mm	64,5(2.54")	PULL 123,5 cm^2 (19.1 in^2)

	Standard Threads	"EM" Option
"B"	G1/8 PORT	1/8-27
"C"	M12X1,75	1/2-13
"D"	M8X1,25	5/16-18

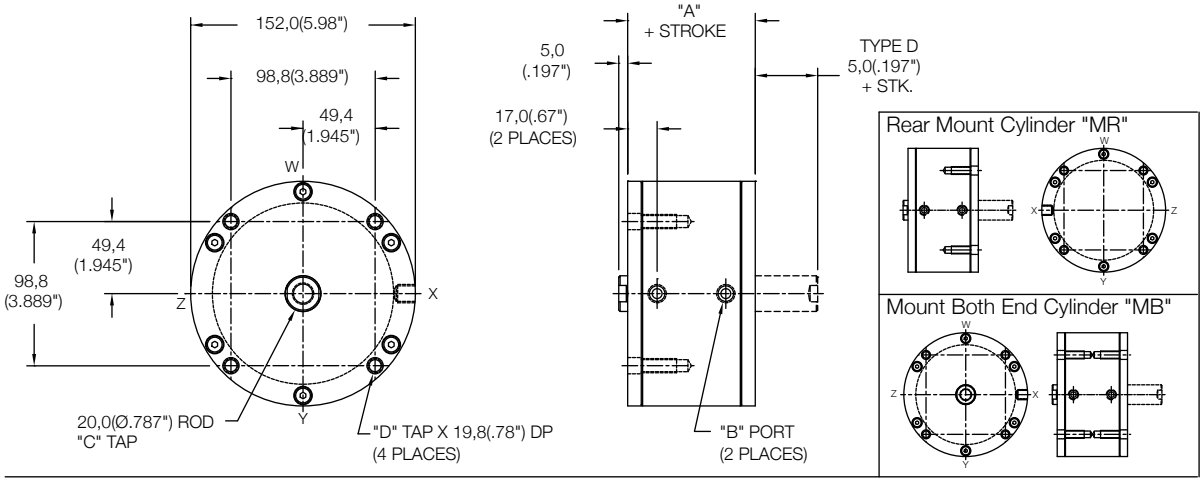

Non Magnetic
Thru Mount Cylinder "MT"

MODEL	TYPE	STANDARD STROKES	"A"	PISTON AREA
LS	_,D	10mm - 45mm	44,5(1.75")	PUSH 126,7 cm^2 (19.6 in^2)
LE	_	5mm - 35mm	54,5(2.15")	
LH	_,D	5mm - 25mm	64,5(2.54")	PULL 123,5 cm^2 (19.1 in^2)

	Standard Threads	"EM" Option
"B"	G1/8 PORT	1/8-27
"C"	M12X1,75	1/2-13

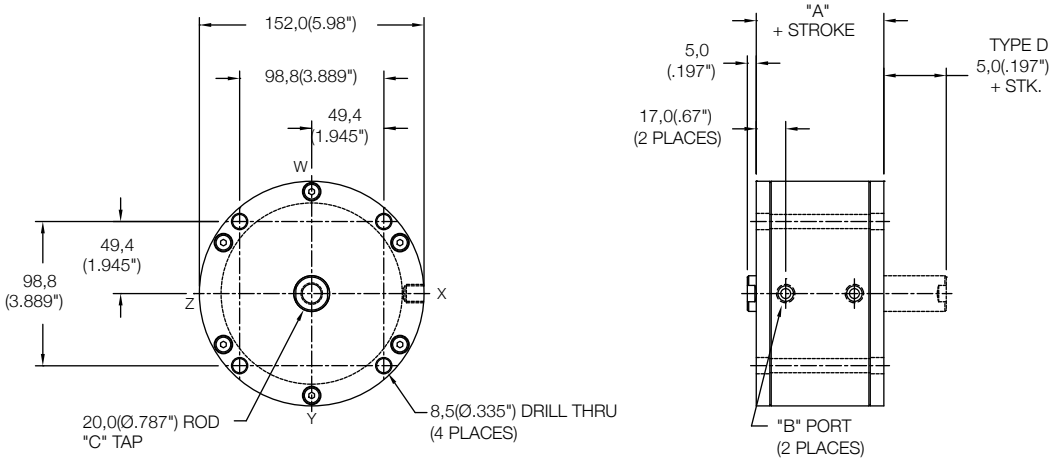

☐ - 127 X ☐ ☐ ☐ - ☐ ☐ ☐

MODEL: LS, LE, LH

BORE: 127

STROKE: 5mm - 100mm STROKE (SEE STROKE RANGE)

TYPE:
- BLANK - NO CODE, DOUBLE ACTING, SINGLE ROD
- D - DOUBLE ACTING, DOUBLE ROD

MOUNTING:
- MT - THRU MOUNT
- MF - FRONT MOUNT
- MR - REAR MOUNT
- MB - BOTH END MOUNTS
- FF - FRONT FLANGE
- FR - REAR FLANGE
- (FOR FLANGES SEE PAGE 92)

OPTIONS:
- EM - INCH THREADS & PORT OPTIONS
- HS - HIGH TEMPERATURE SEALS OPTION: AVAILABLE ON LE AND LH MODELS ONLY (SEE PAGE 97)
- PE - PORT ENLARGEMENT (AVAILABLE W/ "EM" OPTION ONLY = 1/4-18 NPT PORTS)
- RE - ROD EYE (SEE PAGE 96)
- RS - MALE STUD FOR ROD END (SEE PAGE 96)
- RF, RH, RN, RT, RV, RY - ROD EXTENSIONS (SEE PAGE 96)

Magnetic
Front Mount Cylinder "MF"

MODEL	TYPE	STANDARD STROKES	"A"	PISTON AREA
LS	_,D	10mm - 100mm	54,5(2.15")	PUSH 126,7 cm^2 (19.6 in^2)
LE	_	5mm - 100mm	64,5(2.54")	
LH	_,D	5mm - 100mm	74,5(2.93")	PULL 123,5 cm^2 (19.1 in^2)

	Standard Threads	"EM" Option
"B"	G1/8 PORT	1/8-27
"C"	M12X1,75	1/2-13
"D"	M8X1,25	5/16-18

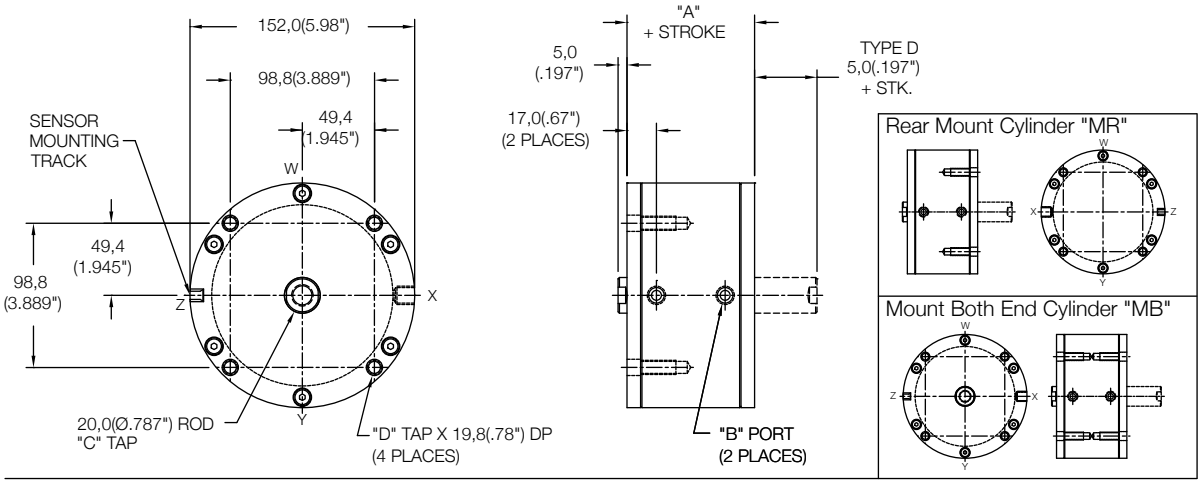

Magnetic
Thru Mount Cylinder "MT"

MODEL	TYPE	STANDARD STROKES	"A"	PISTON AREA
LS	_,D	10mm - 35mm	54,5(2.15")	PUSH 126,7 cm^2 (19.6 in^2)
LE	_	5mm - 25mm	64,5(2.54")	
LH	_,D	5mm - 15mm	74,5(2.93")	PULL 123,5 cm^2 (19.1 in^2)

	Standard Threads	"EM" Option
"B"	G1/8 PORT	1/8-27
"C"	M12X1,75	1/2-13

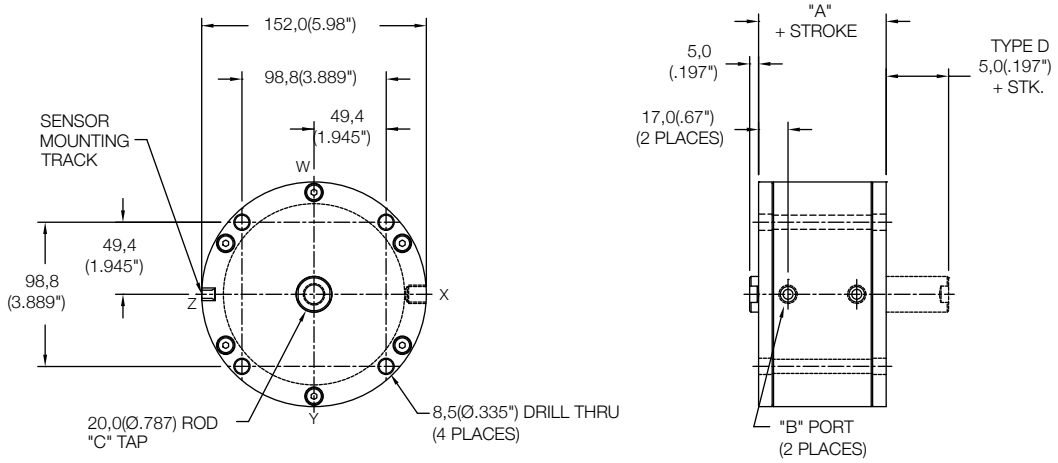

[ ] - [127] X [ ] [ ] [ ] [M] - [ ] [ ] [ ]

MODEL: LS, LE, LH

BORE: 127

STROKE: 5mm - 100mm STROKE (SEE STROKE RANGE)

TYPE:
- BLANK - NO CODE, DOUBLE ACTING, SINGLE ROD
- D - DOUBLE ACTING, DOUBLE ROD

MOUNTING:
- MT - THRU MOUNT
- MF - FRONT MOUNT
- MR - REAR MOUNT
- MB - BOTH END MOUNTS
- FF - FRONT FLANGE
- FR - REAR FLANGE
- (FOR FLANGES SEE PAGE 92)

MAGNETIC: M

OPTIONS:
- EM - INCH THREADS & PORT OPTIONS
- HS - HIGH TEMPERATURE SEALS OPTION: AVAILABLE ON LE AND LH MODELS ONLY (SEE PAGE 97)
- PE - PORT ENLARGEMENT (AVAILABLE W/ "EM" OPTION ONLY = 1/4-18 NPT PORTS)
- RE - ROD EYE (SEE PAGE 96)
- RS - MALE STUD FOR ROD END (SEE PAGE 96)
- RF, RH, RN, RT, RV, RY - ROD EXTENSIONS (SEE PAGE 96)

SENSORS SOLD SEPARATELY
SKS, SKP, SCS, SCP - SOLID STATE LIMIT SENSORS (SEE PAGE 88)

Non Magnetic
Front Mount Cylinder "MF"

MODEL	TYPE	STANDARD STROKES	"A"	PISTON AREA
LS	_,D	10mm - 100mm	51,0(2.00")	PUSH 181,46 cm^2 (28.2 in^2) PULL 176,55 cm^2 (27.45 in^2)

	Standard Threads	"EM" Option
"B"	G1/8 PORT	1/8-27
"C"	M16X2,0	5/8-18
"D"	M8X1,25	5/16-18

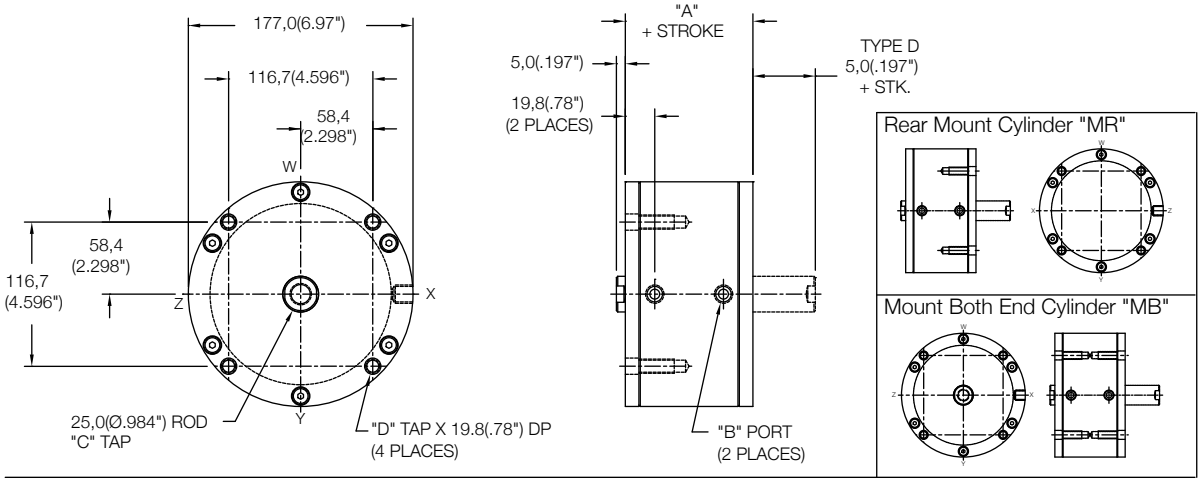

Non Magnetic
Thru Mount Cylinder "MT"

MODEL	TYPE	STANDARD STROKES	"A"	PISTON AREA
LS	_,D	10mm - 40mm	51,0(2.00")	PUSH 181,46 cm^2 (28.2 in^2) PULL 176,55 cm^2 (27.45 in^2)

	Standard Threads	"EM" Option
"B"	G1/8 PORT	1/8-27
"C"	M16X2,0	5/8-18

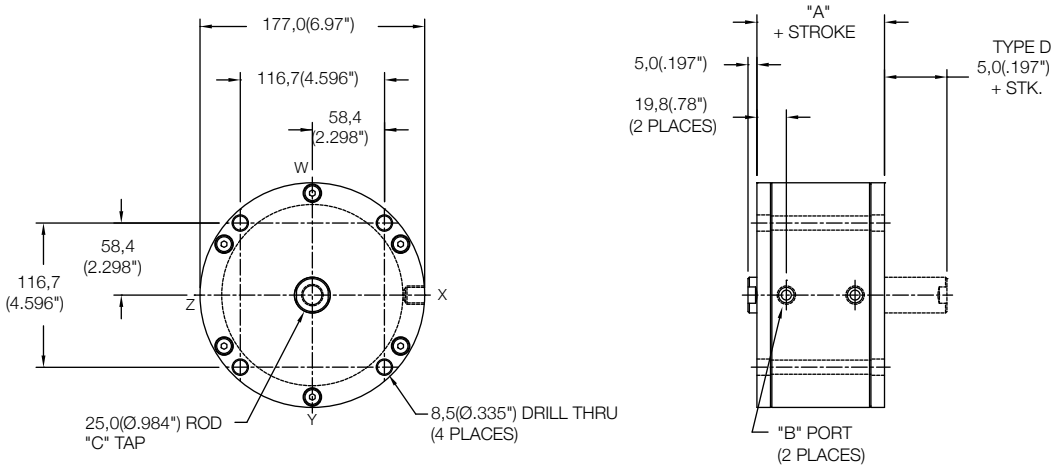

☐ - 152 X ☐ ☐ ☐ - ☐ ☐ ☐

MODEL: LS
BORE
STROKE
TYPE
MOUNTING
OPTIONS

10mm - 100mm STROKE
(SEE STROKE RANGE)

BLANK - NO CODE, DOUBLE ACTING, SINGLE ROD
D - DOUBLE ACTING, DOUBLE ROD

MT - THRU MOUNT
MF - FRONT MOUNT
MR - REAR MOUNT
MB - BOTH END MOUNTS
FF - FRONT FLANGE
FR - REAR FLANGE
(FOR FLANGES SEE PAGE 92)

- EM - INCH THREADS & PORT OPTIONS
- HS - HIGH TEMPERATURE SEALS OPTION: AVAILABLE ON LE AND LH MODELS ONLY (SEE PAGE 97)
- PE - PORT ENLARGEMENT (AVAILABLE W/ "EM" OPTION ONLY = 1/4-18 NPT PORTS)
- RE - ROD EYE (SEE PAGE 96)
- RS - MALE STUD FOR ROD END (SEE PAGE 96)
- RF, RH, RN, RT, RV, RY - ROD EXTENSIONS (SEE PAGE 96)

Magnetic
Front Mount Cylinder "MF"

MODEL	TYPE	STANDARD STROKES	"A"	PISTON AREA
LS	_,D	10mm - 100mm	61,0(2.40")	PUSH 181,46 cm^2 (28.2 in^2) PULL 176,55 cm^2 (27.45 in^2)

	Standard Threads	"EM" Option
"B"	G1/8 PORT	1/8-27
"C"	M16X2,0	5/8-18
"D"	M8X1,25	5/16-18

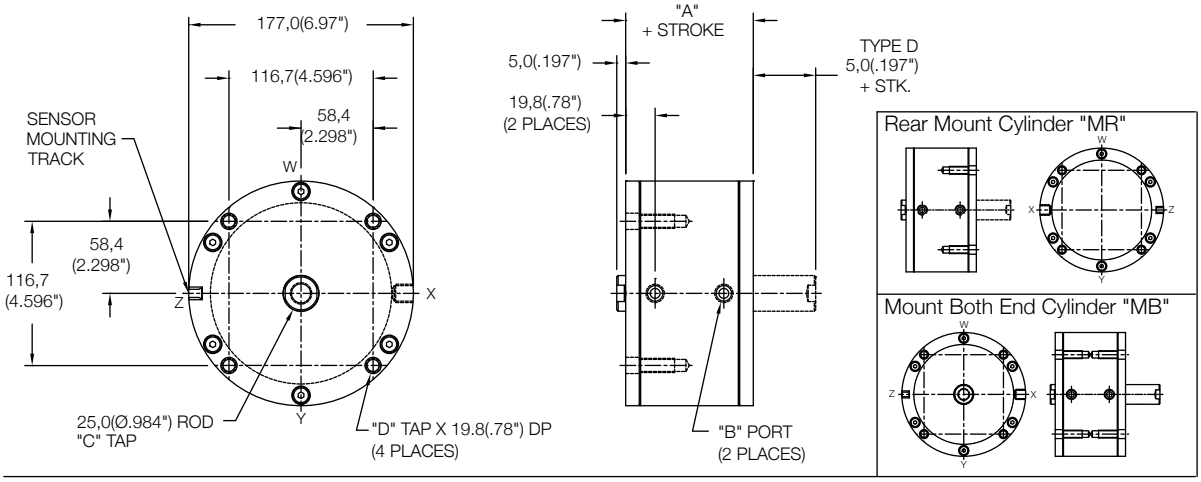

Magnetic
Thru Mount Cylinder "MT"

MODEL	TYPE	STANDARD STROKES	"A"	PISTON AREA
LS	_,D	10mm - 30mm	61,0(2.40")	PUSH 181,46 cm^2 (28.2 in^2) PULL 176,55 cm^2 (27.45 in^2)

	Standard Threads	"EM" Option
"B"	G1/8 PORT	1/8-27
"C"	M16X2,0	5/8-18

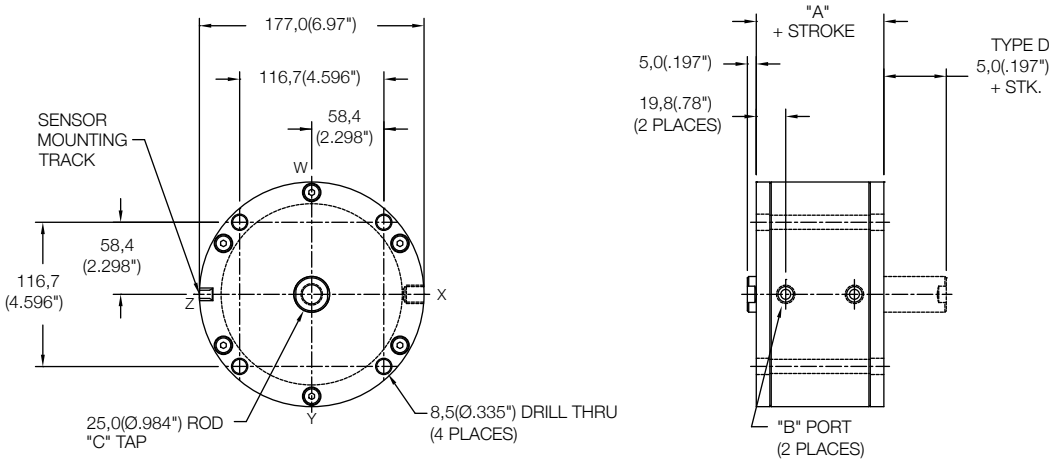

☐ - 152 X ☐ ☐ ☐ M - ☐ ☐ ☐

MODEL (LS) | BORE | STROKE | TYPE | MOUNTING | MAGNETIC | OPTIONS

SENSORS SOLD SEPARATELY
SKS, SKP, SCS, SCP - SOLID STATE LIMIT SENSORS (SEE PAGE 88)

STROKE:
- 10mm - 100mm STROKE (SEE STROKE RANGE)

TYPE:
- BLANK - NO CODE, DOUBLE ACTING, SINGLE ROD
- D - DOUBLE ACTING, DOUBLE ROD

MOUNTING:
- MT - THRU MOUNT
- MF - FRONT MOUNT
- MR - REAR MOUNT
- MB - BOTH END MOUNTS
- FF - FRONT FLANGE
- FR - REAR FLANGE
- (FOR FLANGES SEE PAGE 92)

OPTIONS:
- EM - INCH THREADS & PORT OPTIONS
- HS - HIGH TEMPERATURE SEALS OPTION: AVAILABLE ON LE AND LH MODELS ONLY (SEE PAGE 97)
- PE - PORT ENLARGEMENT (AVAILABLE W/ "EM" OPTION ONLY = 1/4-18 NPT PORTS)
- RE - ROD EYE (SEE PAGE 96)
- RS - MALE STUD FOR ROD END (SEE PAGE 96)
- RF, RH, RN, RT, RV, RY - ROD EXTENSIONS (SEE PAGE 96)