ENAPART

93 S Railroad Avenue Unit C
Bergenfield NJ 07621 USA
www.enapart.com
sales@enapart.com

Friedrich-Ebert-Anlage 36, 60325
Frankfurt am Main, Germany
www.enapart.de
anfrage@enapart.de

〒584-0023　大阪府富田林市若松町
東2丁目2番16号
www.enapart.co.jp
sales@enapart.co.jp

Via del Canneto 35,
Borgosatollo, Brescia - Italia
www.enapart.it
vendite@enapart.it

4 boulevard Carnot, 95400
villiers-le-bel, Paris, France
www.enapart.fr
sales@enapart.fr

PLAZA NUESTRA SEÑORA DE LAS
NIEVES 12 ,LOCAL ,50012,ZARAGOZA
www.enapart.es
ventas@enapart.es

Barbaros Mah. Ihlamur Bul. Ağaoğlu
My Newwork No:3/15 Ataşehir / İstanbul
www.enapart.net
satis@enapart.net

65049, ОДЕСА, ВУЛИЦЯ ІВАНА
ФРАНКА, БУДИНОК 55, ПОВЕРХ 3
www.enapart.com.ua
sales@enapart.com.ua

Складова база „Онгъл“, Склад А2, п.к.
4006, гр. Пловдив, България
www.enapart.bg
sales@enapart.bg

PRIVADA 10 B SUR #3908 COL.
ANZUREZ, C.P. 72530, PUEBLA,PUE
www.enapart.com.mx
sales@enapart.com.mx

MUNICIPIUL BUCUREŞTI, SECTOR 3,
B-DUL BASARABIA, NR.250, CORP P+5
www.enapart.ro
sales@enapart.ro

3 Austin Mews, High Street, Hemel
Hempstead, HP1 3AF , United Kingdom
www.enapart.co.uk
sales@enapart.co.uk

wistro

ILI External Fan Units

Compliant with ERP 2015

Optimum cooling for variable speed motors from sizes 63 to 400.

- Proven casting and sheet metal construction
- High corrosion protection through the use of Al 230 seawater-resistant aluminium alloy; the galvanised sheet steel surfaces can be painted
- High volume flow due to streamlined design
- Consistent IP66 protection class for all versions
- cURus approved
- Excellent vibration resistance thanks to rigid die cast motor housing
- Compact dimensions through use of the inner intake space
- Small number of versions due to multi-voltage concept (230 V single-phase, up to 575 V/60 Hz three-phase) and a single protection class
- EMC-compliant
- Variable, proven length modular system (application with / without B-side motor shaft, attachment of encoder and / or brake), as well as all common brands of motor
- Attractive technical design with captive terminal box screws
- Certification according to ATEX category II 3D/3G / IECEx category Zone 2/22
- Versions for ambient temperatures down to -40°C
- Versions suitable for use in the food industry
- Available as 400/690V version as of size 132

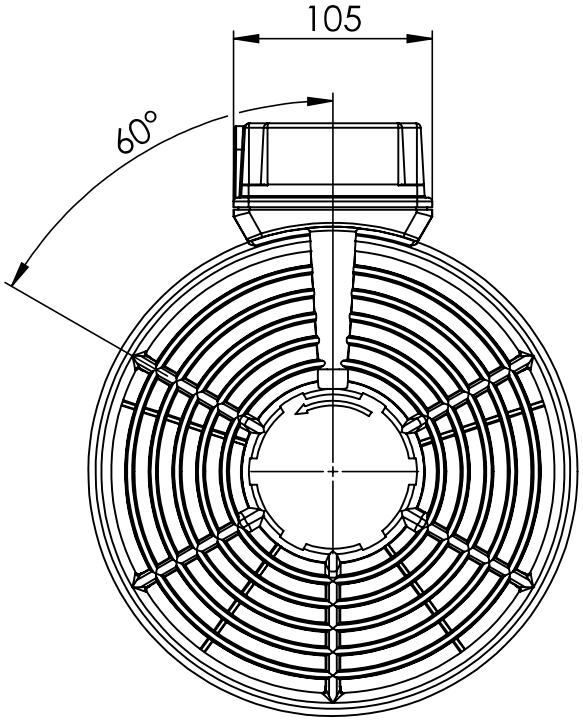

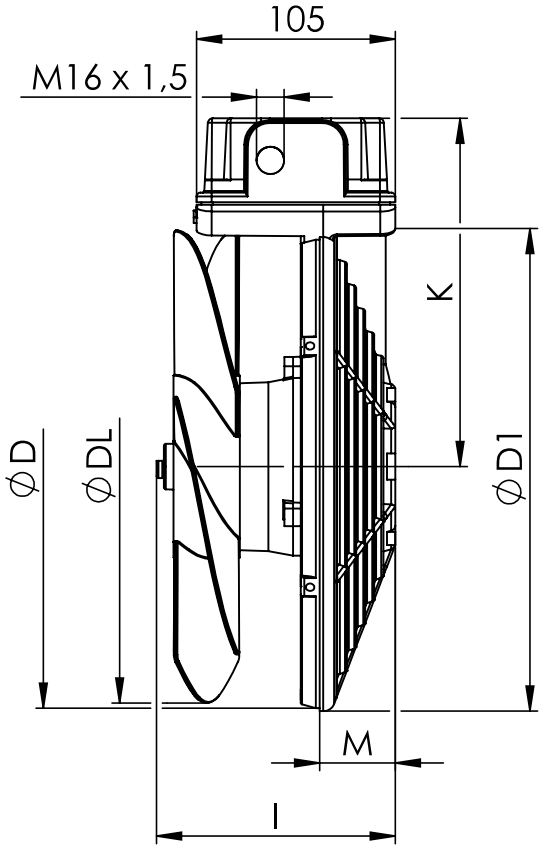

Bg Size HA Tamaño mod.	Sachnummer Article no. Numéro d'article Código de pieza Numero codice	Sachnummer mit Schrauben Article no. with screws Numéro d'article avec visser Código de pieza con tornillos Numero codice con viti	Fixe Maße Fixed dimensions Dimensions fixes Medidas fijas Dimensioni fisse						
			D	DL	D1	l	K	M	m(Kg)
63	15.51.0429	15.50.0548	121	118	124	95	118	20	1,5
71	15.51.0428	15.50.0549	136	132	139	95	124	20	1,6
80	15.51.0430	15.50.0550	154	150	157	95	134	20	1,7
90	15.51.0425	15.50.0551	174	169	177	105	143	30	2,2
100	15.51.0432	15.50.0552	192	187	195	105	152	30	2,4
112	15.51.0433	15.50.0553	216	210	219	105	164	30	2,6
132	15.51.0398	15.50.0463	255	250	258	127	185	40	3,2
160	15.51.0396	15.50.0462	307	300	311	152	211	40	4,7

Zust.	Änderung	Datum	Name
	Bg verfügbar	20.04.17	AB

wistro

Erstellt: 19.04.2016 / LM

24.01.0172

Flansch Bg63 - Bg160 ILI

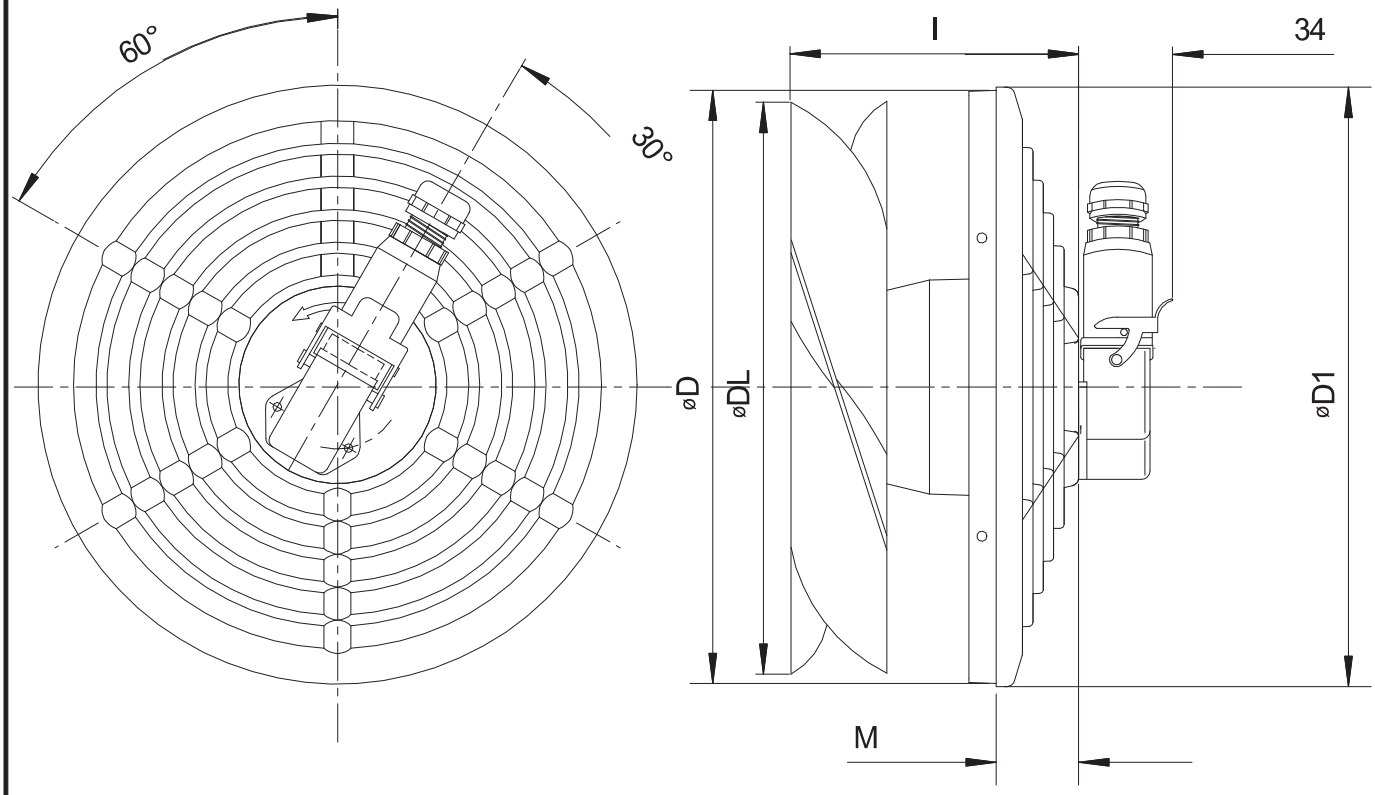

- Motor / monteur 3~ 50/60Hz

Bg size HA Tamaño mod.	Sachnummer Article no. Numéro d'article Código de pieza Numero codice	Fixe Maße Fixed dimensions Dimensions fixes Medidas fijas Dimensioni fisse							
		D	D L	D 1	I	M	m (kg)		
63	15.50.0223	121	118	124	95	20	1,1		
71	15.50.0224	136	132	139	95	20	1,15		
80	15.50.0225	154	150	157	95	20	1,2		
90	15.50.0255 ⓓ	174	169	177	105	30	1,6		
100	15.50.0290	192	187	195	105	30	1,7		
112	15.50.0254	216	210	219	105	30	1,8		
132	15.50.0156	255	250	258	127	40	2,7		
160	15.50.0160	307	300	311	152	40	3,9		

Zust.	Änderung	Datum	Name
d	Sachnummern geändert	18.04.13	Mar
c	Sachnummern eingebracht	07.12.12	Mar
b	diverse	07.12.09	Mar

wistro

Erstellt: 12.07.06/vS

24.40.0067
Flansch Bg63 IL - Bg160 IL
mit Stecker/Kabelverschraubung

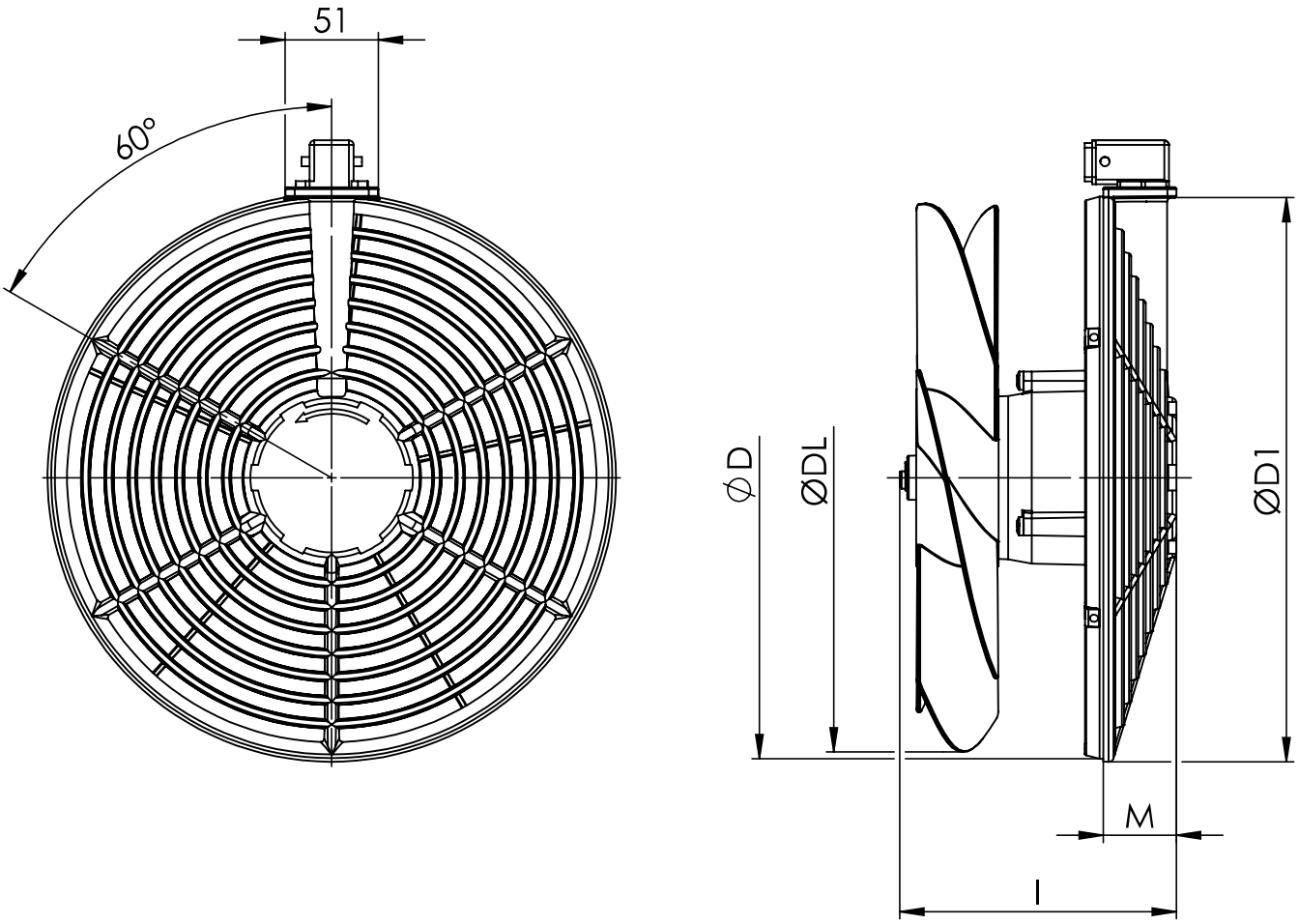

Bg Size HA Tamaño mod.	Sachnummer Article no. Numéro d'article Código de pieza Numero codice	Fixe Maße Fixed dimensions Dimensions fixes Medidas fijas Dimensioni fisse					
		D	DL	D1	l	M	m(Kg)
63	-	121	118	124	95	20	-
71	-	136	132	139	95	20	-
80	-	154	150	157	95	20	-
90	-	174	169	177	105	30	-
100	-	192	187	195	105	30	-
112	-	216	210	219	105	30	-
132	15.50.0442	255	250	258	127	40	3,2
160	15.50.0452	307	300	311	152	40	4,7

- noch nicht verfügbar
- not yet available
- pas encore disponible
- aún no está disponible
- non ancora disponibile

Zust.	Änderung	Datum	Name

wistro

Erstellt: 22.04.2016 / AB

24.02.0172

Flansch Bg63 - Bg160 ILI mit Stecker

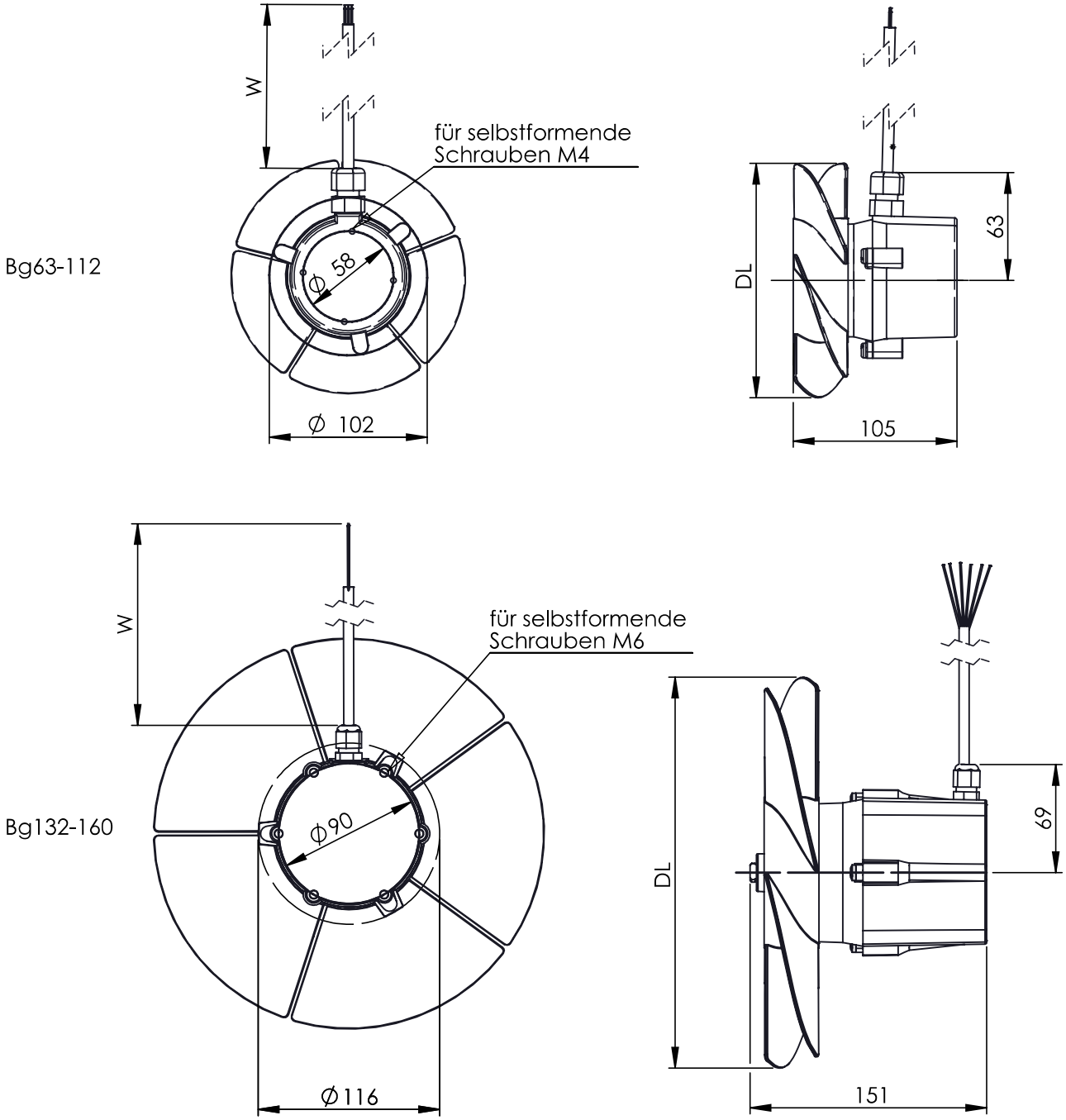

Bg Size HA Tamaño mod.	Sachnummer Article no. Numéro d'article Código de pieza Numero codice	Fixe Maße Fixed dimensions Dimensions fixes Medidas fijas Dimensioni fisse		Bemerkungen Remark Remarque Nota Nota
		DL	W	
63	14.00.0013	118	450	
71	14.00.0014	133	450	
80	14.00.0015	150	450	
90	14.00.0016	170	450	
100	14.00.0017	185	450	
112	14.00.0018	210	450	
132	14.00.0028	250	750	
160	14.00.0029	300	950	

Zust.	Änderung	Datum	Name
B	Bg132/160 hinzu	01.08.17	AB
A	W ~~150~~ = 450	09.01.13	Mar

wistro

Erstellt: 20.01.2011/Anders

24.57.0067
Axial-Einbaulüfter (3~ Motor Y/Δ)

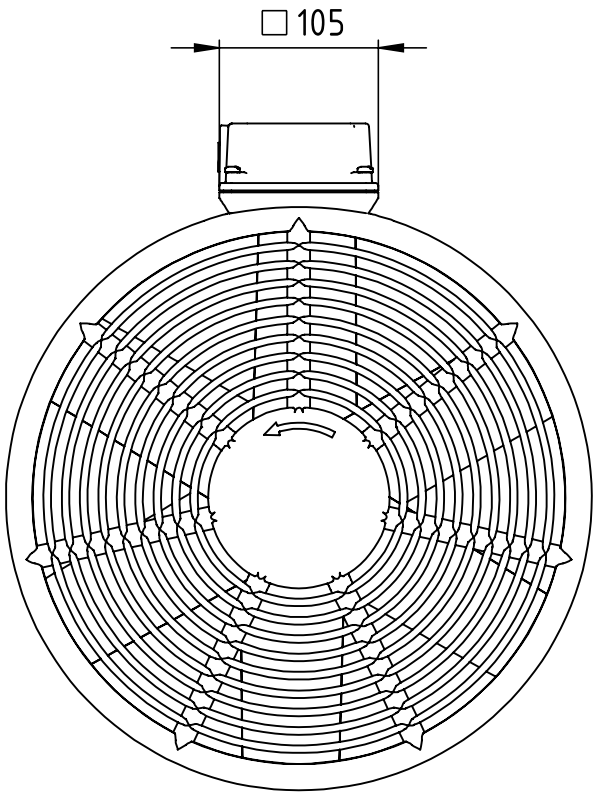

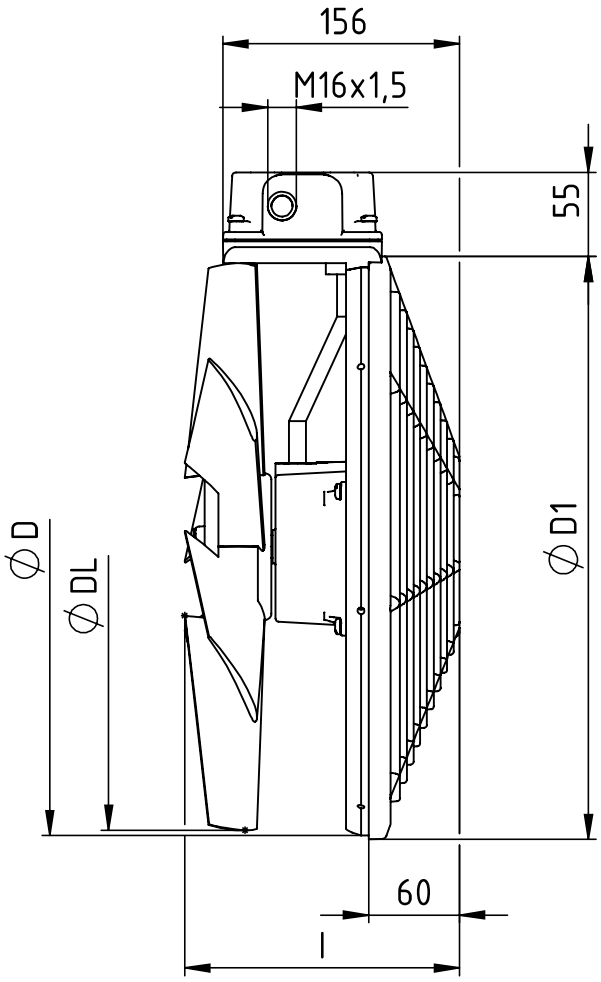

Bg Size HA Tamano mod.	Sachnummer Article no. Numero d'article Código de pieza Numero codice											
		D	D1	DL	l	m(kg)						
204	15.50.0516	382	385	375	195	6,7						
250	15.50.0515	477	480	470	200	9,3						

Zust.	Änderung	Datum	Name	
				Erstellt: 23.08.2018/SL

wistro

24.17.0189
Flansch Bg204/Bg250
vierpolig

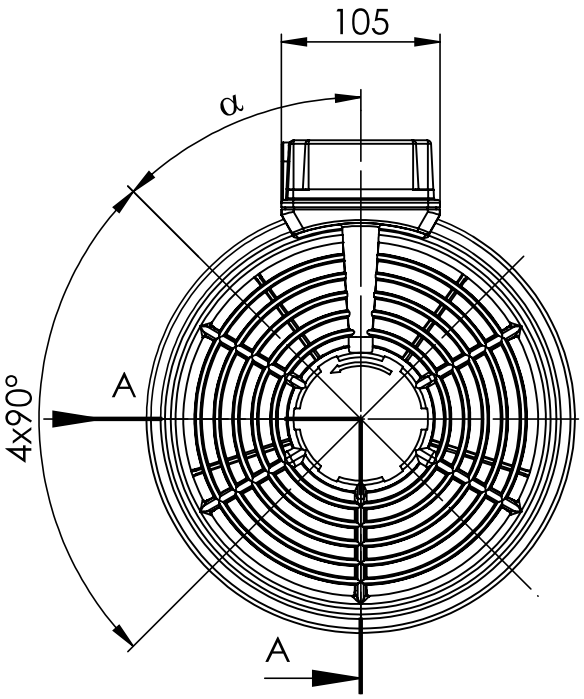

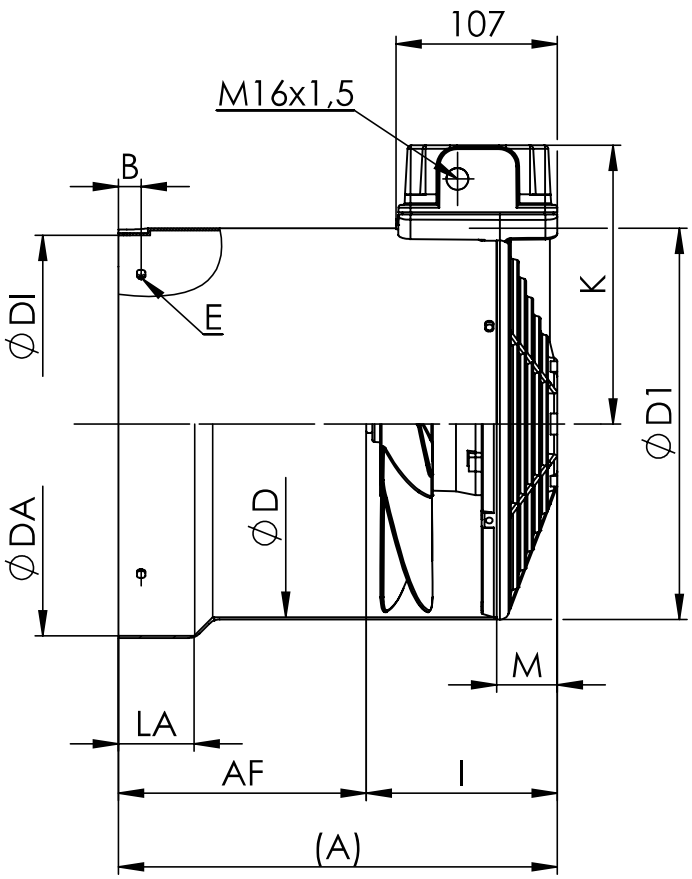

SCHNITT A-A

-Bei abweichender Lochteilung bitte Teilung und Winkel eintragen
-Please sketch position of holes, if different to standard
-Veuillez indiquer ci-dessus la position des orifices au cas où elle diffère du standard
-En caso de perforaciones discordante, introducir separación ángulo
-In presenza di una diversa ripartizione dei fori, registrare la ripartizione e l'angolazione

Bg Size HA Tamaño mod.	Fixe Maße Fixed dimensions Dimensions fixes Medidas fijas Dimensioni fisse					Standardausführung Standard version Version standard Aplicatción estándar Versione standart			kundenspezifische Ausführung Customised version Version sur mesure Aplicatción específicas del cliente Versione personalizzata							
	D1	D	I	K	M	B	E	α	AF	B	LA	DI	DA	E	α	Bemerkungen
63	124	121	95	118	20	7	4,3 x 7	45°								
71	139	136	95	124	20	7	5,5 x 8	45°								
80	157	154	95	134	20	7	5,5 x 8	45°								
90	177	174	105	143	30	7	5,5 x 8	45°								
100	195	192	105	152	30	7	5,5 x 8	45°								
112	219	216	105	164	30	9	5,5 x 8	45°								
132	258	255	127	185	40	20	5,5 x 8	45°								
160	311	307	152	211	40	20	6,6 x 9	45°								

Zust.	Änderung	Datum	Name
	Bg verfügbar	20.04.17	AB

wistro

Erstellt: 07.01.2015 / LM

24.00.0172

Bg63 - Bg160 ILI

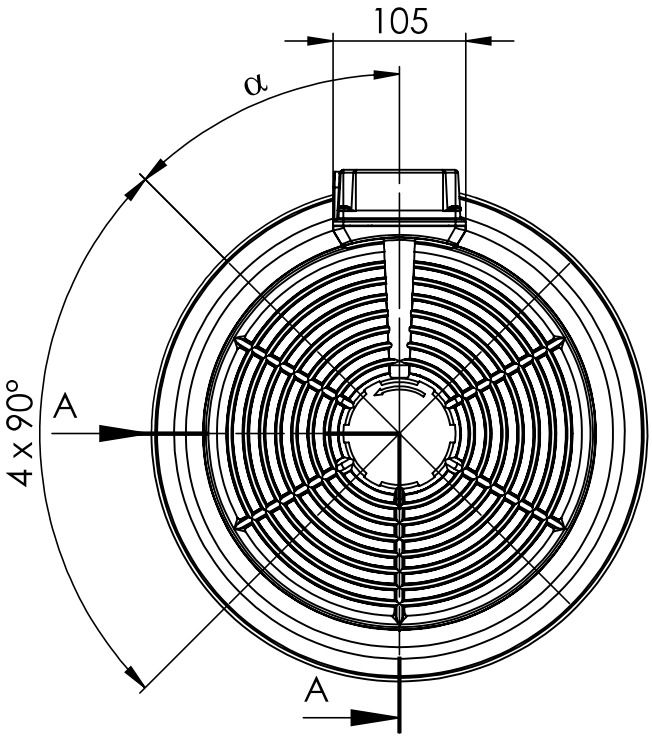

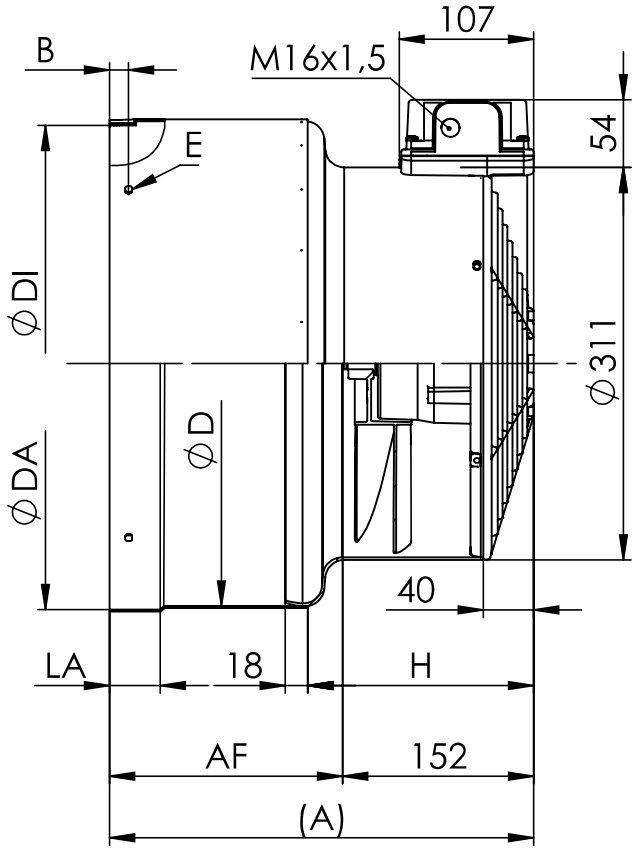

- Bei abweichender Lochteilung bitte Teilung und Winkel eintragen
- Please sketch position of holes, if different to standard
- Veuillez indiquer ci-dessus la position des orifices au cas où elle diffère du standard
- En caso de perforaciones discordante, introducir separación ángulo
- In presenza di una diversa ripartizione dei fori, registrare la ripartizione e l'angolazione

Bg Size HA Tamaño mod.	Fixe Maße Fixed dimensions Dimensions fixes Medidas fijas Dimensioni fisse	Standardausführung Standard version Version standard Aplicacación estándar Versione standart				kundenspezifische Ausführung Customised version Version sur mesure Aplicatción específicas del cliente Versione personalizzata							
	H	B	D	E	α	AF	B	LA	DI	DA	E	α	Bemerkungen
180	169	20	345	6,6x9	45°								
200	179	20	382	6,6x9	45°								

Zust.	Änderung	Datum	Name	Erstellt: 05.01.15/LM

wistro

24.00.0176

Bg180 - Bg200 ILI

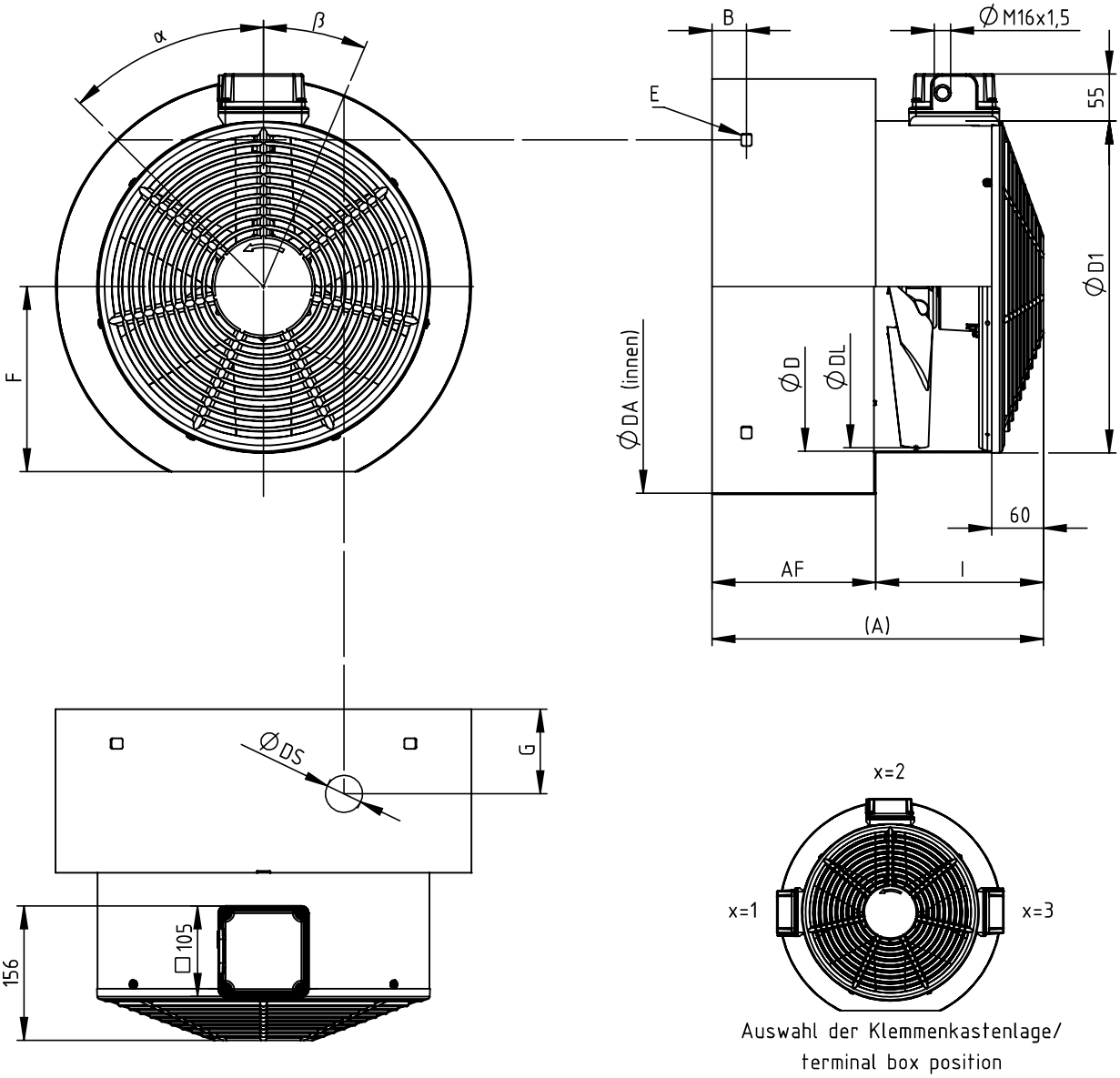

Fixe Maße Fixed dimensions Dimensions fixes Medidas fijas Dimensioni fisse	Kundenspezifische Ausführung Customised version Version sur mesure Aplicatción específicas del cliente Versione personalizzata

Bg	D	D1	DL	l	(A)	AF	DA	B*	E*	F*	α*	DS*	G*	β*	x
204	382	385	375	195											
225	382	385	375	195											
249	382	385	375	195											
250	477	480	470	200											
280	477	480	470	200											
315	477	480	470	200											
355	477	480	470	200											
400	477	480	470	200											
450	477	480	470	200											

* Standardausführung, andere Längen nach Kundenspezifikation möglich
* Standard version, different length available
* Version standard, différent spécifications disponibles
* Aplicación estándar, posibilidad de otras longitudes según las especificaciones

Zust.	Änderung	Datum	Name
a	ÄM 2618	08.08.18	LM

wistro

Erstellt: 14.03.18/AB

24.00.0189
FLAI Bg204-450 ILI

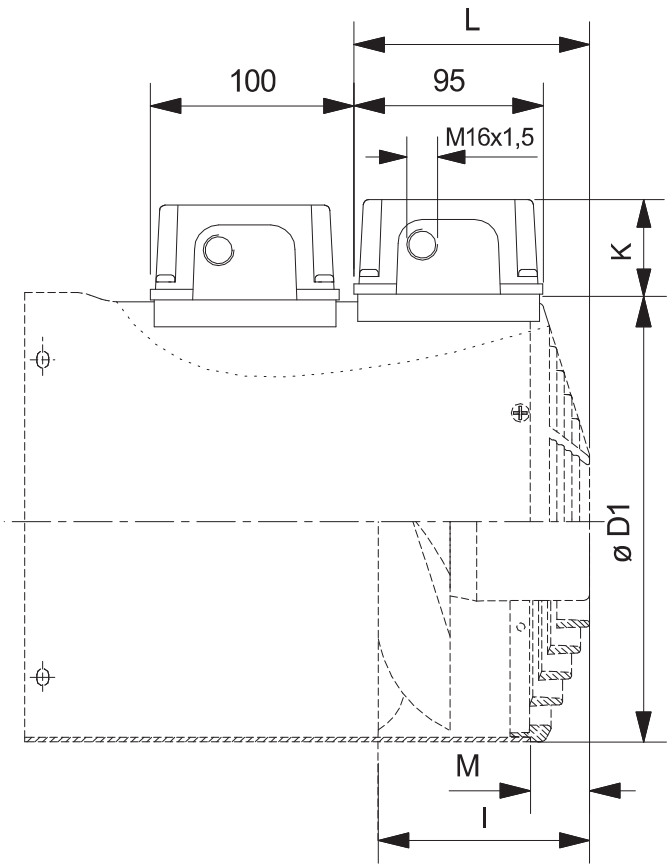

Bg size HA Tamaño mod.	Fixe Maße Fixed dimensions Dimensions fixes Medidas fijas Dimensioni fisse					Standardausführung Standard version Version standard Aplicacación estándar Versione standart				Kundenspezifische Ausführung Customised version Version sur mesure Aplicatción específicas del cliente Versione personalizzata					
	D 1	l	L	K	M	B	D	E	α	AF	B	DA*	E	α	Bemerkungen
63	124	95	107	53	20										
71	139	95	107	53	20										
80	157	95	107	53	20										
90	177	105	117	53	30										
100	195	105	117	53	30										
112	219	105	117	53	30										
132	258	127	127	54	40										
160	311	152	127	54	40										

* Abweichende Innendurchmesser möglich
* Different diameters available
* Différents diamètres intérieurs disponibles
* Es posible que el diámetro interior sea discordante
* Possibilitá di diametri interni diversi

a	diverse	08.12.09	Mar
Zust.	Änderung	Datum	Name

wistro

Erstellt: 01.04.08/vS

24.00.0141
Bg63 IL - Bg160 IL
mit zweitem Klemmkasten

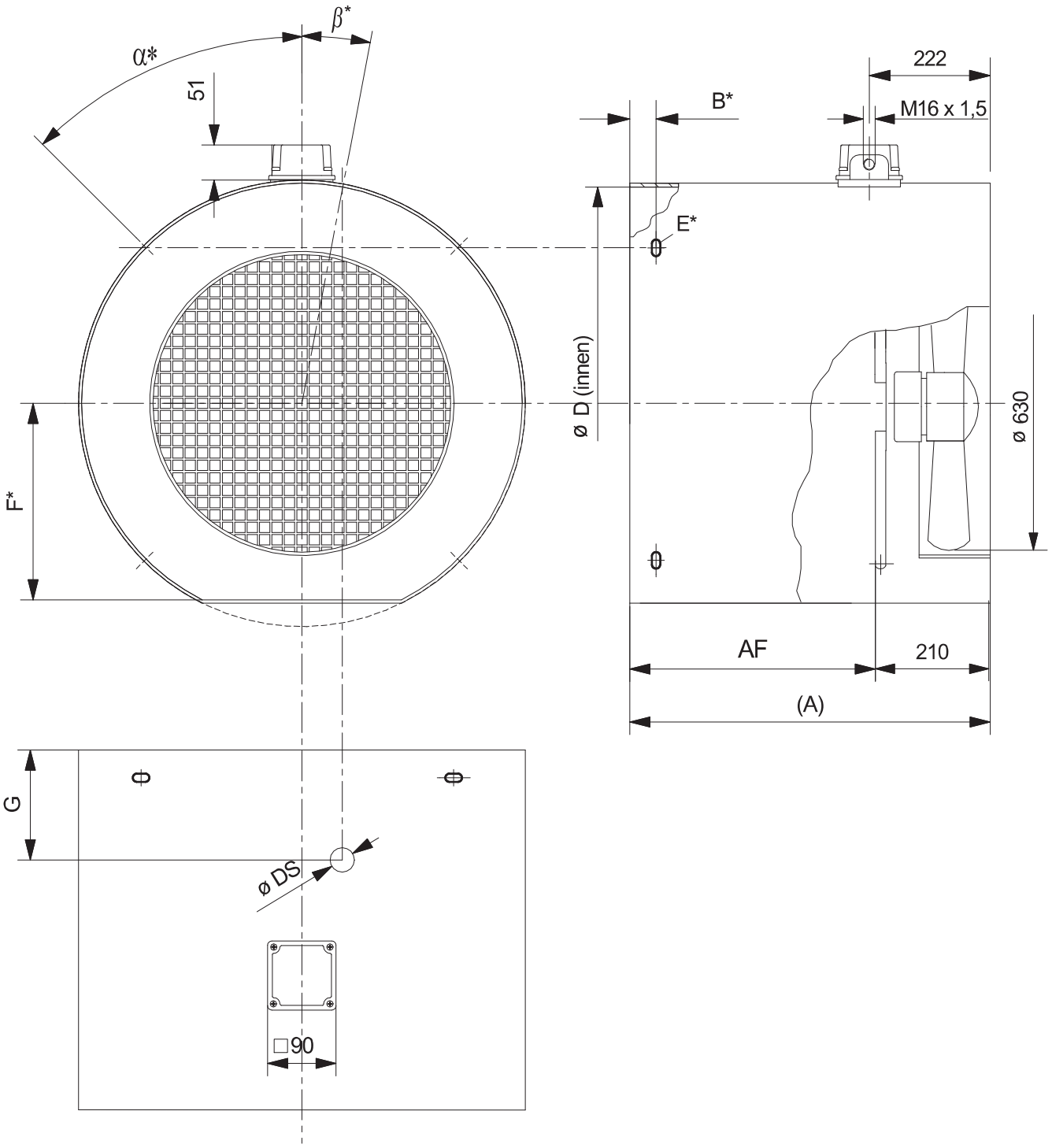

Kundenspezifische Ausführung
Customised version
Version sur mesure
Aplicatción específicas del cliente
Versione personalizzata

AF	(A)	D	B*	F*	α*	E*	DS*	G*	β*

*Standardausführung ohne Fläche u. Lochungen, Maße nur bei Bedarf eintragen
*Standard version without attachment plate or holes, dimensions to be entered only if required
*Version standard sans plaque de fixation ni orifices; dimensions ne sont à indiquer que si nécessaire
*Aplicación estándar sin área ni perforación, introducir medidas solo si es necesario
*Versione standard senza superficie e foratura, registrare le dimensioni solo in caso di necessità

				wistro	24.00.0144 FLA Bg400 - 560
a	Bg hinzu	19.01.12	An		
Zust.	Änderung	Datum	Name	Erstellt: 09.02.04/Fab	

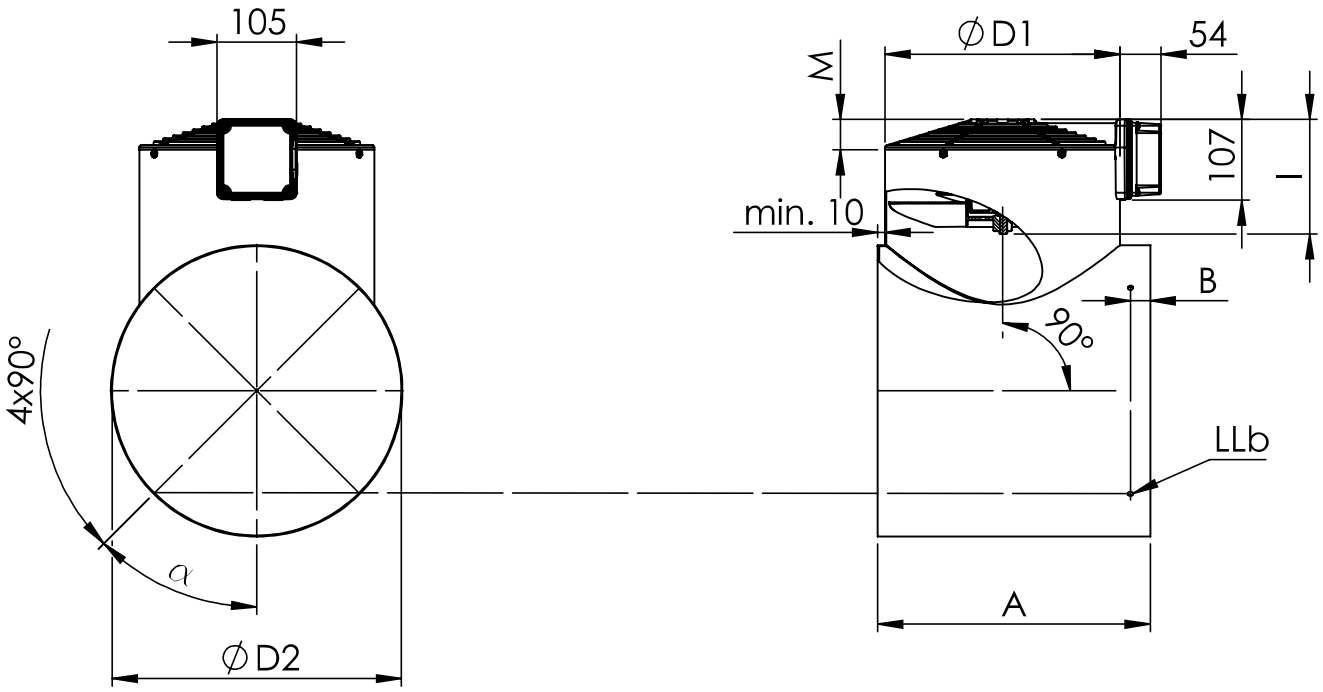

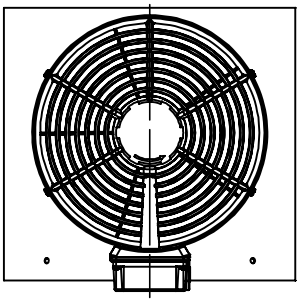

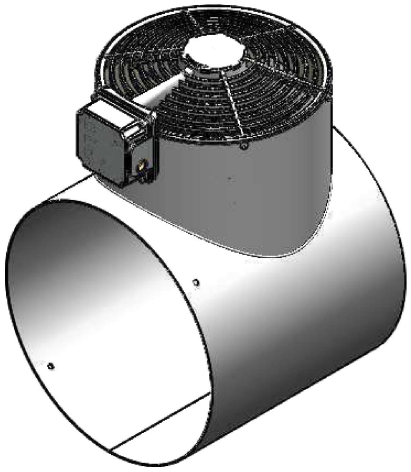

Bg Size HA Tamaño mod.	Fixe Maße Fixed dimensions Dimensions fixes Medidas fijas Dimensioni fisse			Standardausführung Standard version Version standard Aplicacación Versione standart		Kundenspezifische Ausführung Customised version Version sur mesure Aplicatción específicas del cliente Versione personalizzata					
	D1	I	M	B	LLb	D2	A	α	B	LLb	Bemerkungen
63	124	95	20	7	4,3 x 7						
71	139	95	20	7	5,5 x 8						
80	157	95	20	7	5,5 x 8						
90	177	105	30	7	5,5 x 8						
100	195	105	30	7	5,5 x 8						
112	219	105	30	9	5,5 x 8						
132	258	127	40	20	5,5 x 8						
160	311	152	40	20	6,6 x 9						

Zust.	Änderung	Datum	Name	Erstellt: 05.09.16 / AB

wistro

24.01.0168
Fremdlüfter mit T-Rohr
Bg63-160

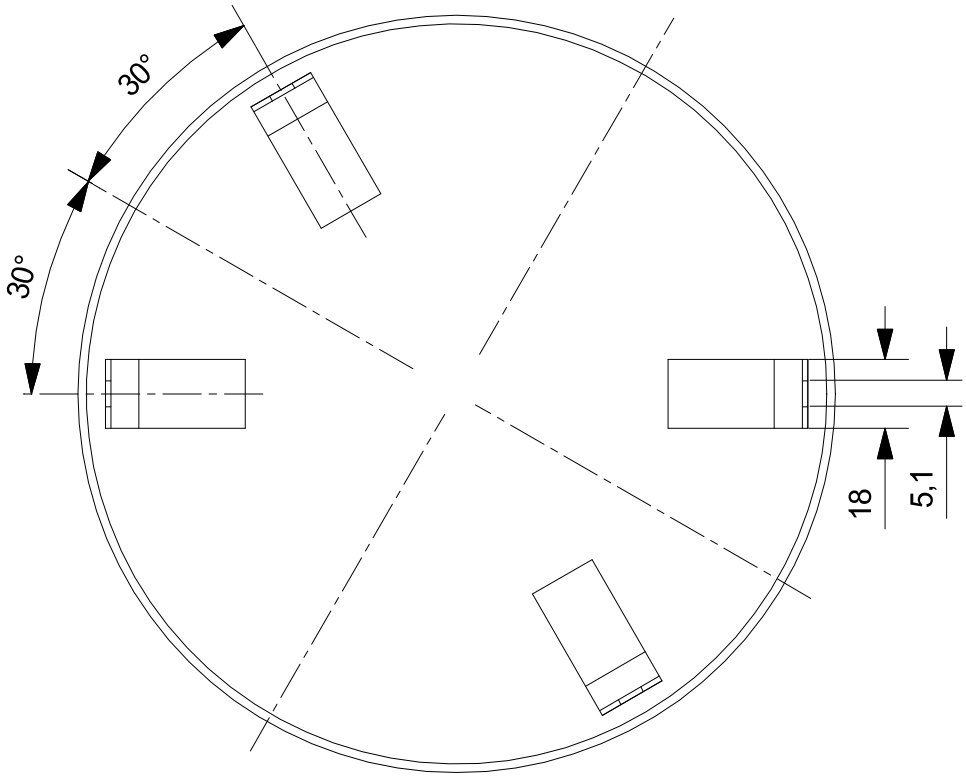

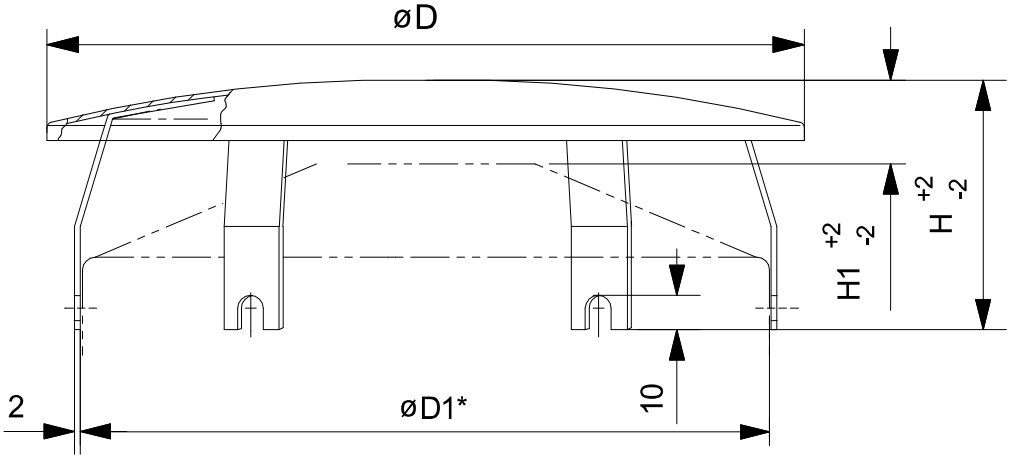

Bg size HA Tamaño mod.	Sachnummer Article no. Numéro d'article Código de pieza Numero codice	D	D1	H	H1	m (kg)	
63	23.00.0126	133	124	72	40	0,20	
71	23.01.0126	150	139	72	40	0,25	
80	23.02.0126	170	157	75	43	0,30	
90	23.03.0126	188	177	75	33	0,35	
100	23.04.0126	210	195	73	31	0,50	
112	23.05.0126	249	219	79	37	0,70	
132	23.08.0126	300	258	84	28	1,30	
160 180 200	23.09.0126	338	311	91	35	1,60	

	Anpassung ILI	20.11.15	AB	wistro	Maßblatt 24.00.0084
	Maße angepasst	26.10.15	AB		Regenschutzdach IL
	neue Zeichnung	04.11.04	Fab		Bg63 - 200
Zust.	Änderung	Datum	Name	Erstellt: 04.11.04/Fab	

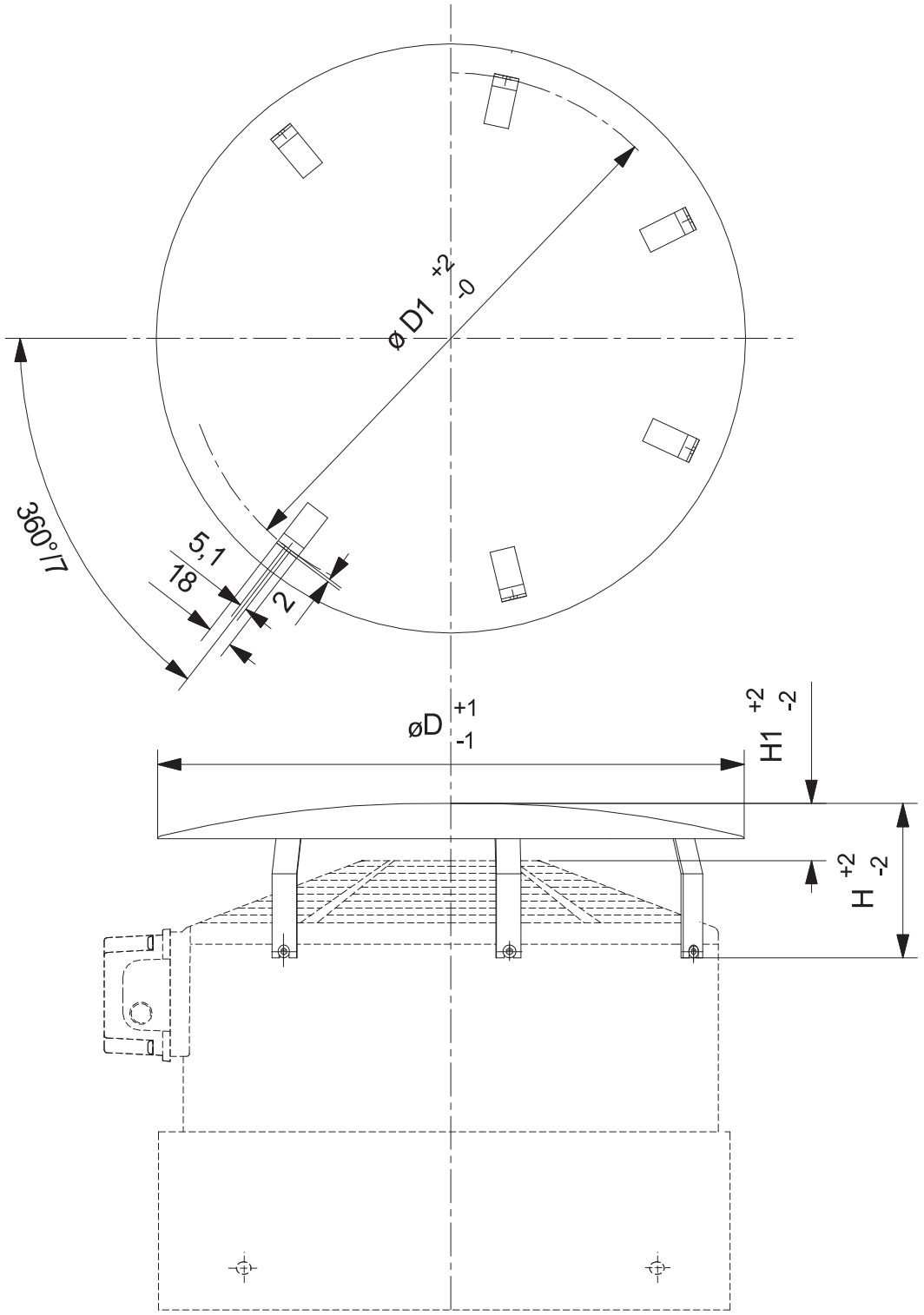

Bg size HA Tamaño mod.	Sachnummer Article no. Numéro d'article Código de pieza Numero codice	D	D1	H	H1	m (kg)
204	23.00.0301	424	385	120	50	2,5
250	23.01.0301	510	480	120	50	3,5

Zust.	Änderung	Datum	Name

wistro

Erstellt: 05.07.06/Fab

Maßblatt 24.04.0122
Regenschutzdach IL
Bg204 - Bg450

Fremdlüfteraggregate für diverse Motorenfabrikate sind unter ***www.wistro.com*** → *Produktanfrage* verfügbar. Für Fragen stehen wir Ihnen selbstverständlich auch persönlich zur Verfügung. Bitte betrachten Sie das folgende Zeichnungsmaterial als Beispiel.

Forced ventilation units are available for several types of motors which you can find on ***www.wistro.com*** → *Product enquiries*. If you have any questions do not hesitate to contact us. Please regard the following drawings as examples.

Les groupes de ventilation forcée pour diverses marques de moteurs sont disponibles à l'adresse ***www.wistro.com*** → *Demande de produit*. En cas de questions, nous sommes bien sûr à votre disposition. Veuillez tenir compte des dessins suivants pour exemples.

En ***www.wistro.com*** → *Solicitud de producto* encontrará unidades de ventilación independientes para diferentes marcas de motores. Por supuesto, estamos a su disposición para cualquier duda. Las siguientes ilustraciones deben considerarse meros ejemplos.

I gruppi ventilatori esterni per diversi produttori sono disponibili all'indirizzo ***www.wistro.com*** → *Richiesta informazioni sul prodotto*. Per eventuali richieste l'azienda è a completa disposizione anche per consultazioni personali. Prendere in considerazione i disegni riportati di seguito a titolo d'esempio.

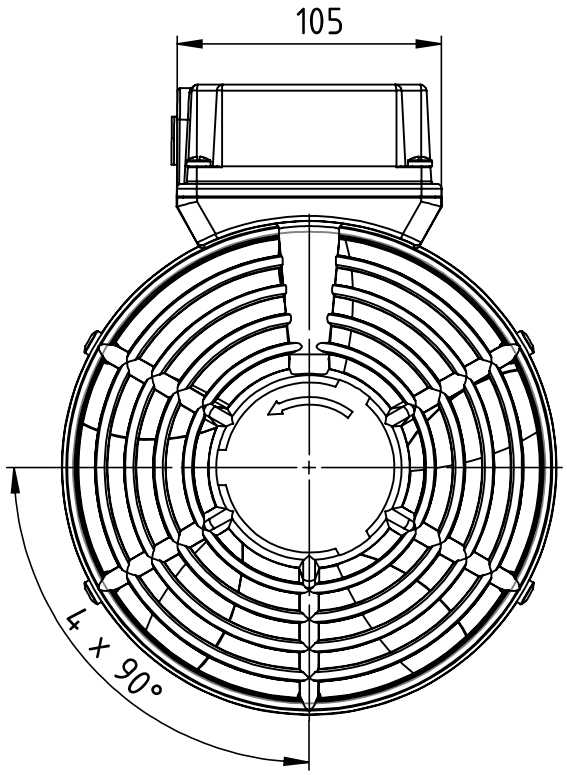

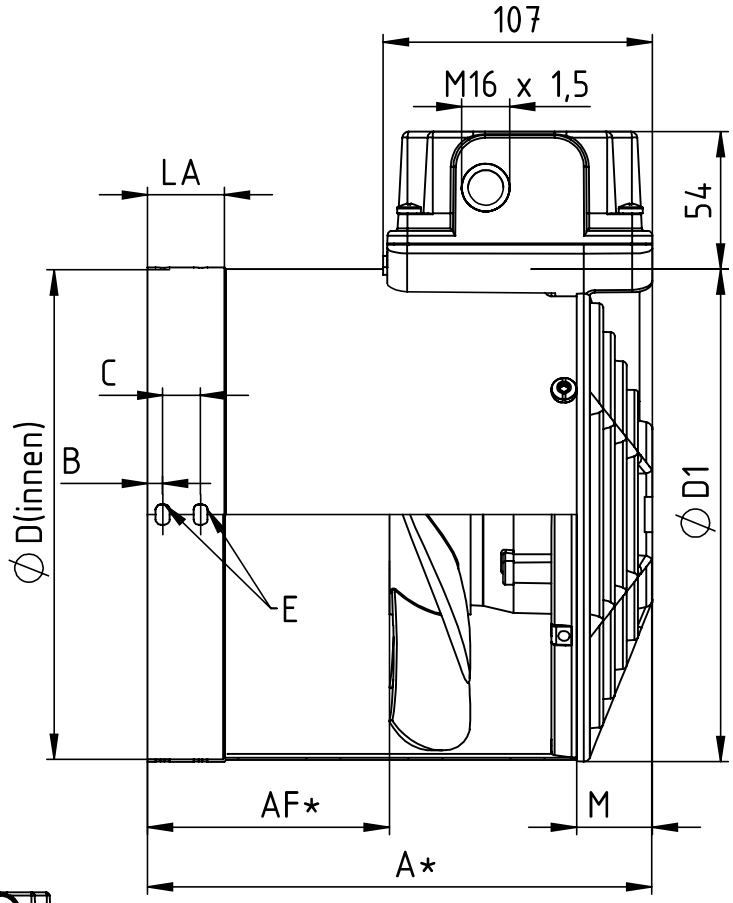

17.10.0542/17.10.0545

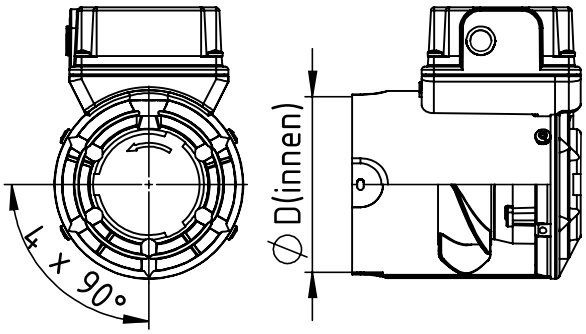

Bg Size HA Taman mod.	Sachnummer Article no. Numero d'article Código de pieza Numero codice	A*	AF*	B	C	D	D1	LA	M
63	17.10.0542	151	56	5,5	-	116	124	-	20
71	17.10.0543	165	70	5,5	-	135	139	25	20
80	17.10.0544	166	71	5,5	-	155	157	25	20
90	17.10.0545	195	90	5,5	-	172	177	-	30
100	17.10.0546	200	95	6,0	15	194	195	30	30
112	17.10.0547	212	107	6,0	15	219	219	40	30
132	17.10.0155	252	125	6,0	20	258	258	45	40
160	17.10.0156	295	143	6,0	20	312	311	50	40

* Standardausführung, andere Längen nach Kundenspezifikation möglich
* Standard version, different length available
* Version standard, différent spécifications disponibles
* Aplicación estándar, posibilidad de otras longitudes según las especificaciones
* Versione standard, altre lunghezze possibili in base alle specifiche dei clienti

Zust.	Änderung	Datum	Name

wistro

Erstellt: 29.08.2017/LM

24.14.0172
Siemens 1LA7
Bg63 - Bg160

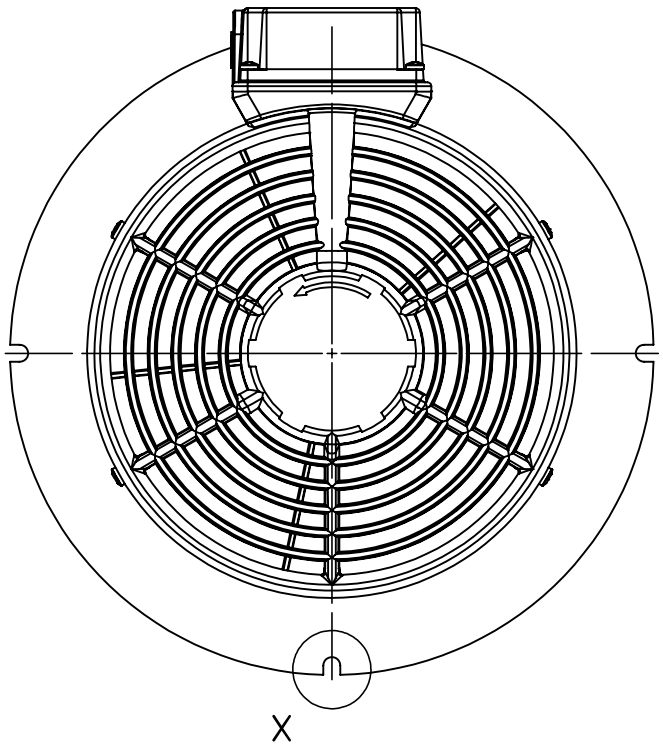

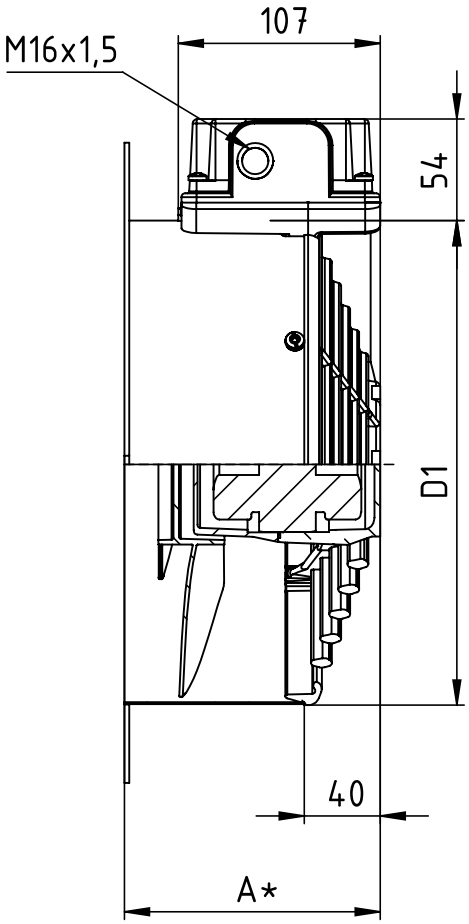

X
Bg180, Bg200

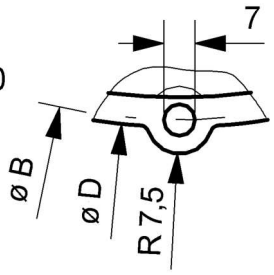

X
Bg225, Bg250, Bg280, Bg315

Bg Size HA Tamano mod.		Sachnummer Article no. Numero d'article Código de pieza Numero codice	* Standardausführung, andere Längen nach Kundenspezifikation möglich * Standard version, different length available * Version standard, différent spécifications disponibles * Aplicación estándar, posibilidad de otras longitudes según las especificaciones * Versione standard, altre lunghezze possibili in base alle specifiche dei clienti				
1LA6, LG4	WISTRO		A*	B	D	D1	
180	(132)	17.10.0254	135	265	268	258	
200							
225	(132)	17.10.0295	135	330	340	258	
250							
280	(160)	17.10.0236	160	350	361	311	
315	(160)	17.10.0240	160	380	391	311	

Zust.	Änderung	Datum	Name	Erstellt: 05.07.2016/AB

wistro

24.05.0172
SIEMENS 1LG4
Bg180 ILI -Bg315 ILI

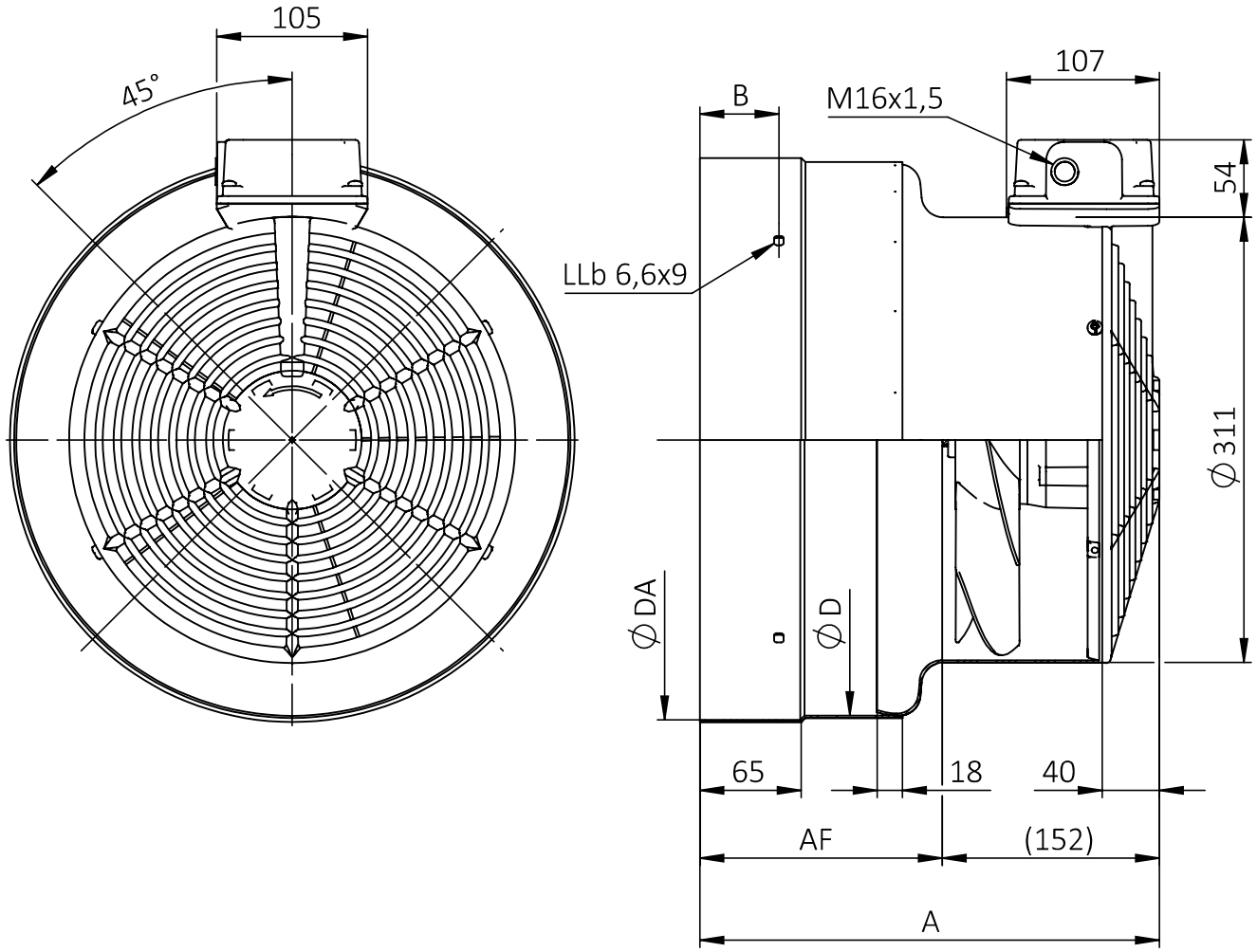

Bg Size HA Tamaño mod.	Sachnummer Article no. Numéro d'article Código de pieza Numero codice	Standardausführung, andere Längen nach Kundenspezifikation möglich Standard version, different length available Version standard, différent spécifications disponibles Aplicación estándar, posibilidad de otras longitudes según las especificaciones Versione standard, altre lunghezze possibili in base alle specifiche dei clienti					
		A	AF	D	DA	B	
180	17.10.0313	320	168	345	350	50	
200	17.10.0214	320	168	382	390	55	

Zust.	Änderung	Datum	Name	Erstellt: 24.04.2018/AB

wistro

24.04.0176
Siemens 1LA5 Bg180 - Bg200

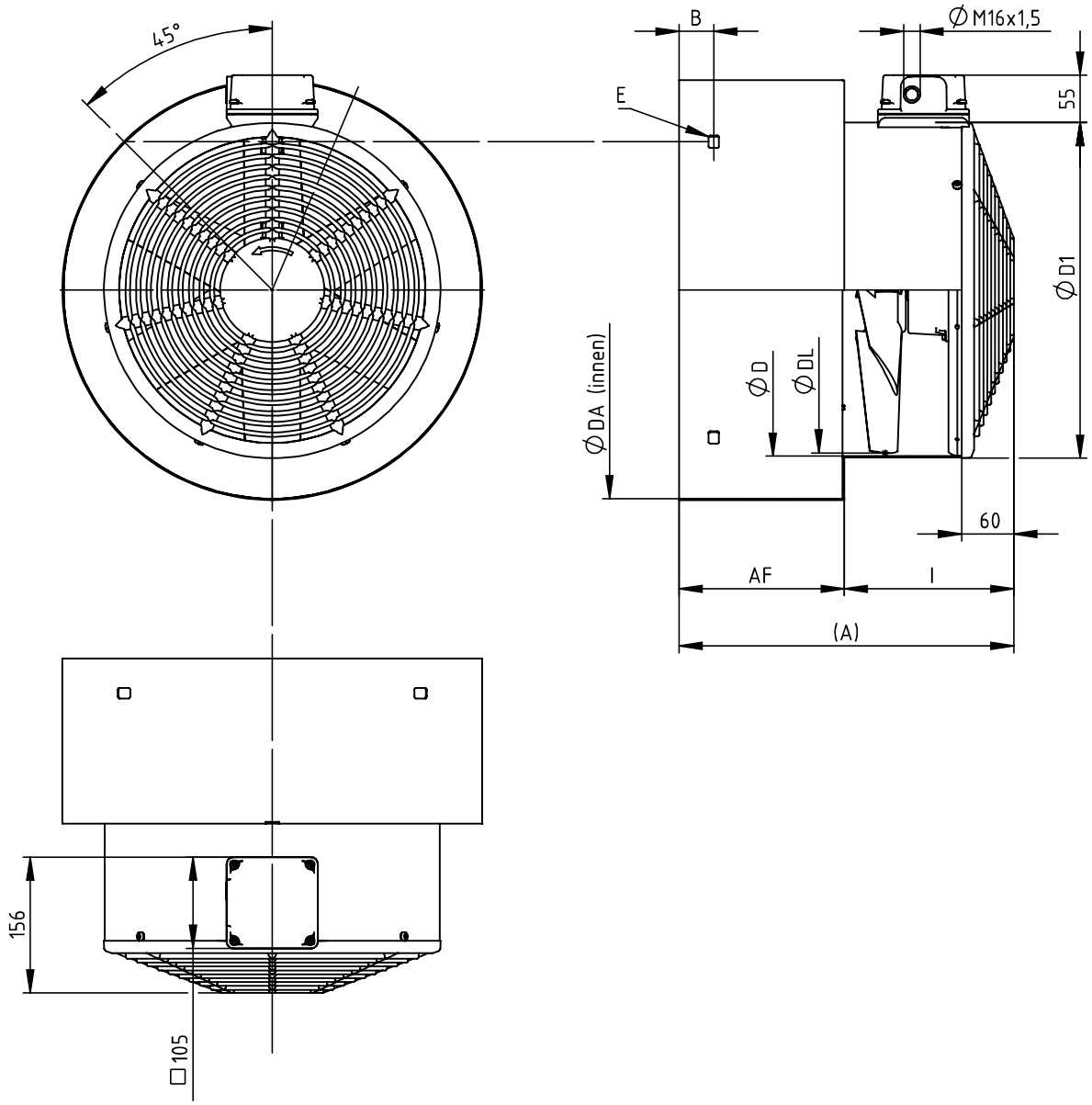

Bg Size HA Tamano mod.	Sachnummer Article no. Numero d'article Código de pieza Numero codice	Fixe Maße Fixed dimensions Dimensions fixes Medidas fijas Dimensioni fisse				Standardausführung, andere Längen nach Kundenspezifikation möglich Standard version, different length available Version standard, différent spécifications disponibles Aplicación estándar, posibilidad de otras longitudes según las especificaciones Versione standard, altre lunghezze possibili in base alle specifiche dei clienti				
		D	D1	DL	I	A	AF	B	DA	E
225	17.10.1114	382	385	375	195	411	216	65	424	Ø9
250	17.10.1115	382	385	375	195	435	240	73	475	Ø9
280	17.10.1109	477	480	470	200	449	249	73	525	Ø9
315	17.10.1056	477	480	470	200	473	273	58	586	Ø9

Zust.	Änderung	Datum	Name	Erstellt: 24.08.2018/SL

wistro

24.08.0189
Siemens 1LG4
Bg225 ILI - Bg315 ILI

wistro

Installation declaration

for an incomplete machine within the meaning of the EEC Machine Directive 2006/42/EU Annex IIB

The version of the external ventilation units size 63 to 450 with built-in asynchronous internal and external rotor motor or electronic commutate internal and external rotor motor has been developed, designed and produced in compliance with the above EEC directives under the sole responsibility of the company

WISTRO
Elektro-Mechanik-GmbH
Berliner Allee 29 – 31
D-30855 Langenhagen

and complies with the requirements of Annex I, Articles 1.1.2, 1.1.5, 1.4.1, 1.5.1 of the EU Machine Directive 2006/42/EU.

The following harmonised standards have been used:

EN 60204-1: 2019 Safety of machines; electrical equipment of machines
EN ISO 12100 : 2010 Safety of machines; fundamental terms, general design guidelines
EN ISO 13857 : 2008 Safety of machines; safe distances

The special technical documents as per Annex VII Part B have been produced and are completely available.

In case of a justified request, the special documents will be communicated to the State authority. This communication may be made electronically, on data carriers or on paper. All protective rights remain with the manufacturer stated above.

This product is only intended for integration into a system which is completed with other devices and must be operated as such. The operator of the overall system is responsible for compliance with the Machine Directive and the conformity procedures.

Langenhagen, 02.03.20

W. Strohmeyer

W. Strohmeyer

Manager and person authorised for the special technical documents.

wistro

EU Declaration of Conformity

In the sense of the EU Low Voltage Directives 2014/35/EU, EMC 2014/30/EU, ERP 2009/125/EC* and RoHS 2011/65/EU.

The version of the external ventilation units types FLA, FLAI and FLAIR has been developed, designed and produced in compliance with the above EU directives under the sole responsibility of the company:

WISTRO
Elektro-Mechanik-GmbH
Berliner Allee 29 – 31
D-30855 Langenhagen

The following harmonised standards have been used:

EN 50581	:2012
EN 60034-1	:2010 + Cor.:2010
EN 60204-1	:2018
EN 60529	:1991 + A1:2000 + A2:2013 + Cor.:2016 + Cor.:2019
EN 61000-6-3	:2007 + A1:2011 + Cor.:2012
EN 61000-6-2	:2019

The content of the EMC Directive 2014/30/EU only applies to this product if it is directly connected to the normal power supply network. If the product is integrated into a system or is supplemented and operated with other devices, the manufacturer or operator of the total system is responsible for compliance with the EMC Directive.

*All products affected by this directive comply with the guide line (EC) Nr. 327/2011 as per year 2015.

Langenhagen, 12.05.2020

W. Strohmeyer

W. Strohmeyer - Manager

12.05.20, SL

Supplier´s declaration for the EU chemicals regulation according to regulation 1907/2006/EG (REACH)

We hereby declare that our products

- forced ventilation units type IL and ILI for motor sizes from 63 to 560 -

are compliant with the above EU directive and do not contain substances of very high concern according to the current version of the candidate list or include shares only below the applicable limits.

Langenhagen, 16.07.2020

W. Strohmeyer (GM)

Supplier's declaration for the avoidance of hazardous substances as per Directive 2011/65/EU (RoHS)

We hereby declare that our products, which have been delivered after 31.03.2015 do not contain the following substances in excess of the stated concentrations:

Chromium VI	0.1% by weight
Cadmium	0.01% by weight
Mercury	0.1% by weight
Lead	0.1% by weight
Polybrominated diphenyl ether (PBDE)	0.1% by weight
Polybrominated biphenyl (PBB)	0.1% by weight
Di(2-ethylhexyl)phthalat	0,1% by weight
Butylbenzylphthalat	0,1% by weight
Dibutylphthalat	0,1% by weight
Diisobutylphthalat	0,1% by weight

A special notification will be made regarding products which do not comply with these requirements.

Amendments which affect the above limits will be notified immediately.

Langenhagen, 16.07.2020

W. Strohmeyer (GM)

CERTIFICATE OF COMPLIANCE

Certificate Number	20150311-E233141
Report Reference	E233141-20021218
Issue Date	2015-MARCH-11
Issued to:	WISTRO ELEKTRO-MECHANIK GMBH BERLINER ALLEE 29-31 30855 LANGENHAGEN GERMANY
This is to certify that representative samples of	COMPONENT - MOTORS USR/CNR Component – Electric Fan Motor, single or three phase, Models B20, B30, B31, C35, C36, C60, C61, C62, E30, D48 and F50, Models E31 IL-2-1/063-OT, E31 IL-2-1/071-OT, E31 IL-2-1/080-OT, E31 IL-2-3/063-OT, E31 IL-2-3/071-OT and E31 IL-2-3/080-OT. Have been investigated by UL in accordance with the Standard(s) indicated on this Certificate.
Standard(s) for Safety:	Ul 1004-1 Standard for rotating electrical machines - general requirements Csa-c22.2 no. 100-14 Motors and generators
Additional Information:	See the UL Online Certifications Directory at www.ul.com/database for additional information

Only those products bearing the UL Certification Mark should be considered as being covered by UL's Certification and Follow-Up Service.

Recognized components are incomplete in certain constructional features or restricted in performance capabilities and are intended for use as components of complete equipment submitted for investigation rather than for direct separate installation in the field. The final acceptance of the component is dependent upon its installation and use in complete equipment submitted to UL LLC.

Look for the UL Certification Mark on the product.

Bruce Mahrenholz, Assistant Chief Engineer, Global Inspection and Field Services

UL LLC

Any information and documentation involving UL Mark services are provided on behalf of UL LLC (UL) or any authorized licensee of UL. For questions, please contact a local UL Customer Service Representative at http://ul.com/aboutul/locations/

CERTIFICATE OF COMPLIANCE

Certificate Number	20120227-E321784
Report Reference	E321784-20120227
Issue Date	2012-FEBRUARY-27
Issued to:	WISTRO ELEKTRO-MECHANIK GMBH BERLINER ALLEE 29-31 30855 LANGENHAGEN GERMANY
This is to certify that representative samples of	COMPONENT - FANS, ELECTRIC Low Voltage Component Fans, Series G30 followed by 24, followed by 063, 071, 080, 090, 100 or 112. Have been investigated by UL in accordance with the Standard(s) indicated on this Certificate.
Standard(s) for Safety:	USR - Standard for Electric Fans, UL 507. CNR - Canadian Standard for Fans and Ventilators, CSA C22.2 No. 113-10.
Additional Information:	See the UL Online Certifications Directory at www.ul.com/database for additional information

Only those products bearing the UL Recognized Component Marks for the U.S. and Canada should be considered as being covered by UL's Recognition and Follow-Up Service and meeting the appropriate U.S. and Canadian requirements.

The UL Recognized Component Mark for the U.S. generally consists of the manufacturer's identification and catalog number, model number or other product designation as specified under "Marking" for the particular Recognition as published in the appropriate UL Directory. As a supplementary means of identifying products that have been produced under UL's Component Recognition Program, UL's Recognized Component Mark: , may be used in conjunction with the required Recognized Marks. The Recognized Component Mark is required when specified in the UL Directory preceding the recognitions or under "Markings" for the individual recognitions. The UL Recognized Component Mark for Canada consists of the UL Recognized Mark for Canada: and the manufacturer's identification and catalog number, model number or other product designation as specified under "Marking" for the particular Recognition as published in the appropriate UL Directory.

The final acceptance of the component is dependent upon its installation and use in complete equipment submitted to UL LLC.

Look for the UL Recognized Component Mark on the product.

William R. Carney, Director, North American Certification Programs

UL LLC

Any information and documentation involving UL Mark services are provided on behalf of UL LLC (UL) or any authorized licensee of UL. For questions, please contact a local UL Customer Service Representative at www.ul.com/contactus

CERTIFICATE

Management system as per
DIN EN ISO 9001 : 2015

In accordance with TÜV NORD CERT procedures, it is hereby certified that

WISTRO Elektro-Mechanik GmbH
Berliner Allee 29-31
30855 Langenhagen
Germany

applies a management system in line with the above standard for the following scope

Development, production and sale of industrial fans as well as external fan units with steel casings and/or steel casing components.

Certificate Registration No. 44 100 110005
Audit Report No. 3519 4042

Valid until 2020-05-15
Initial certification 2011

Certification Body
at TÜV NORD CERT GmbH

Essen, 2017-05-17

This certification was conducted in accordance with the TÜV NORD CERT auditing and certification procedures and is subject to regular surveillance audits.

TÜV NORD CERT GmbH Langemarckstraße 20 45141 Essen www.tuev-nord-cert.com

Deutsche Akkreditierungsstelle
D-ZM-12007-01-01

CERTIFICATE

Management system as per
DIN EN ISO 14001 : 2015

In accordance with TÜV NORD CERT procedures, it is hereby certified that

WISTRO Elektro-Mechanik GmbH
Berliner Allee 29-31
30855 Langenhagen
Germany

applies a management system in line with the above standard for the following scope

Development, production and sale of industrial fans as well as external fan units with steel casings and/or steel casing components.

Certificate Registration No. 44 104 110005
Audit Report No. 3519 4043

Valid until 2020-05-15
Initial certification 2011

Certification Body
at TÜV NORD CERT GmbH

Essen, 2017-05-17

This certification was conducted in accordance with the TÜV NORD CERT auditing and certification procedures and is subject to regular surveillance audits.

TÜV NORD CERT GmbH Langemarckstraße 20 45141 Essen www.tuev-nord-cert.com

Deutsche Akkreditierungsstelle
D-ZM-12007-01-01

TÜV NORD ANLAGENTECHNIK GMBH
Am TÜV 1
30519 Hannover

TÜV NORD
ANLAGENTECHNIK

Bescheinigung über die Prüfung des Gehäuseschutzgrades gemäß DIN VDE 0470, Teil1 / EN 60 529

Prüflabor
Explosionsgeschützte Betriebsmittel
und Überwachungseinrichtungen

Angestrebter Schutzgrad: IP 66

Prüfeinrichtung gemäß DIN VDE 0470,Teil 1 / EN 60 529,
Abschnitte 13.4, 13.6, 14.2.6 und14.3
(Staubkammer und Strahldüse 12,5 mm)

Auftraggeber:	Fa. WISTRO Elektro-Mechanik GmbH Karl-Kellner-Str. 105 a 30853 Langenhagen
Prüfgegenstand:	Fremdlüfteraggregat Bg 63 bis 200 -Reihe IL
Prüfergebnis:	**1. Fremdkörperschutz**
	Staubeintritt nein
	2. Wasserschutz
	Wassereintritt: nein
Bearbeiter:	Dr. Ing. M. Rusch / H. Lenz
Auftragsnummer:	7512 PE 00900
Prüfdatum:	09.05.2000

Der Prüfgegenstand erfüllt die Anforderungen an den Gehäuseschutzgrad IP 66

Hannover, 17.05.2000
Ort, Datum

Der Leiter des Prüflabors
Explosionsgeschützte Betriebsmittel
und Überwachungseinrichtungen

Die auszugsweise Vervielfältigung dieser Bescheinigung und die Verwendung zu Werbezwecken bedarf der schriftlichen Genehmigung des Prüflaboratoriums.
Diese Bescheinigung stellt das Ergebnis der Prüfung an dem vorgestellten Prüfgegenstand dar. Eine allgemein gültige Aussage über die Qualität der Produkte aus der laufenden Fertigung kann daraus nicht abgeleitet werden.

Volumenstrom [m³/h], Baureihe IL / ILI
Air current capacity [m³/h], type IL / ILI
Courant en volumes [m³/h], version IL / ILI
Caudal volumétrico [m³/h], variante de serie IL / ILI
Portata in volume[m³/h], serie IL / ILI

IL

Bg Frame size HA Tamaño mod.	400V 50Hz 3 ~ Y 2-polig	460V 60Hz 3 ~ Y 2-polig	400V 50Hz 3 ~ Y 4-polig	460V 60Hz 3 ~ Y 4-polig	400V 50Hz 3 ~ Δ 4-polig	460V 60Hz 3 ~ Δ 4-polig
63	54	69	/	/	/	/
71	78	98	/	/	/	/
80	127	148	/	/	/	/
90	200	240	109	130	/	/
100	260	310	141	164	/	/
112	337	411	168	200	/	/
132	532	633	278	330	/	/
160	935	1068	507	607	/	/
180	1145	1270	604	680	/	/
200	1263	1450	640	760	/	/
204	/	/	990	1163	1051	1271
225	/	/	1123	1295	1180	1415
249	/	/	1350	1570	1450	1732
250	/	/	1666	1885	1839	2190
280	/	/	2116	2461	2404	2840
315	/	/	2662	2943	2848	3350

mit b-seitigem Referenzlagerschild /with bearing shield of reference on side b /avec de référence flasque latérale b / placa de referencia en el lado b /con targhetta cuscinetti di riferimento lato b

Volumenstrom [m³/h], Baureihe IL / ILI
Air current capacity [m³/h], type IL / ILI
Courant en volumes [m³/h], version IL / ILI
Caudal volumétrico [m³/h], variante de serie IL / ILI
Portata in volume[m³/h], serie IL / ILI

ILI

Bg Frame size HA Tamaño mod.	400V 50Hz 3 ~ Y 2-polig	460V 60Hz 3 ~ Y 2-polig	400V 50Hz 3 ~ Y 4-polig	460V 60Hz 3 ~ Y 4-polig	400V 50Hz 3 ~ Δ 4-polig	460V 60Hz 3 ~ Δ 4-polig
63	54	69	/	/	/	/
71	78	99	/	/	/	/
80	128	151	/	/	/	/
90	216	258	/	/	/	/
100	278	328	/	/	/	/
112	355	418	180	210	/	/
132	550	650	290	340	/	/
160	980	1160	520	620	/	/
180	1200	1379	619	695	/	/
200	1324	1575	656	776	/	/
204	/	/	1062	1237	1103	1313
225	/	/	1283	1467	1337	1580
249	/	/	1457	1714	1532	1832
250	/	/	1672	1919	1764	2097
280	/	/	2170	2472	2319	2760
315	/	/	2560	2935	2747	3274

mit b-seitigem Referenzlagerschild /with bearing shield of reference on side b /avec de référence flasque latérale b / placa de referencia en el lado b /con targhetta cuscinetti di riferimento lato b

wistro

Schalldruckpegel [dB(A)], Baureihe ILI
noise level [dB(A)], type ILI
niveau de pression acoustique [dB(A)], version ILI
Nivel sonoro [dB(A)], variante de serie ILI
Livello di pressione acustica[dB(A)], serie ILI

Bg Frame size HA Tamaño mod.	400V 50Hz 3 ~ Y 2-polig	460V 60Hz 3 ~ Y 2-polig	400V 50Hz 3 ~ Y 4-polig	460V 60Hz 3 ~ Y 4-polig	400V 50Hz 3 ~ Δ 4-polig	460V 60Hz 3 ~ Δ 4-polig
63	47	52	/	/	/	/
71	51	56	/	/	/	/
80	54	58	/	/	/	/
90	59	63	40	45	/	/
100	60	65	43	47	/	/
112	62	66	45	50	/	/
132	67	71	52	56	/	/
160	73	77	56	60	/	/
180	73	77	56	60	/	/
200	74	78	56	61	/	/
204	/	/	61	65	62	67
225	/	/	62	66	63	67
249	/	/	62	66	64	69
250	/	/	66	71	68	72
280	/	/	67	71	68	73
315	/	/	68	71	70	74

DIN EN ISO 4871 2009-11/ Hüllfläche nach DIN 45635-38 1986-04 beträgt 42,6m²
DIN EN ISO 4871 2009-11/ enveloping surface DIN 45635-38 1986-04 amounts 42,6m²

mit b-seitigem Referenzlagerschild
with bearing shield of reference on side b
avec de référence flasque latérale b
placa de referencia en el lado b
con targhetta cuscinetti di riferimento lato b

Stand: 21.11.2018

Spannungseinsatzbereich, Baureihe IL / ILI
Range of operating voltage, type IL / ILI
Intervalle de mises sous tension, version IL / ILI
Rango de ajuste de tensión, variante de serie IL / ILI
Campo di applicazione della tensione, serie IL / ILI

Drehstrommotor, zweipolig 3~230V/400V **IL**
Three phase alternating current motor, bipolar 3~230V/400V **IL**
Moteur à courant triphasé, bipolaire 3~230V/400V **IL**
Motor trifásico, dos polos 3~230V/400V **IL**
Motore a corrente trifase, a due poli 3~230V/400V **IL**

Betriebsart / Mode / Couplage / Modo de funcionamiento / Modalità operativa	Bg / Frame size / HA / Tamaño / mod.	Lüfterdurchmesser / Blower diameter / Diamètre des ventateurs / Diametro del ventatore / Diametro del ventatore	Spannungsbereich / Range of voltage / Plage de tension / Rango de tensiones / Campo di tensione		Max. zulässiger Strom / Max. permissible current / Courant max. admissible / Corriente máxima permitida / Corrente massima consentita		max. Leistungsaufnahme / max. power input / max. puissance absorbée / Consumo máxima de energía / Potenza massima assorbita	
		(mm)	50Hz (V)	60Hz	50Hz (A)	60Hz	50Hz (W)	60Hz
1~ ⊥(△)	63	118	230-277	230-277	0,11	0,12	27	32
	71	132	230-277	230-277	0,10	0,12	27	33
	80	150	230-277	230-277	0,11	0,14	29	37
	90	169	220-277	220-277	0,29	0,25	65	65
	100	187	220-277	220-277	0,28	0,30	66	75
	112	210	220-277	220-277	0,28	0,37	71	94
	132	250	230-277	230-277	0,40	0,57	98	149
	160-200	300	230-277	----------	0,97	----------	253	----------
3~ Y	63	118	346-525	380-575	0,07	0,06	28	28
	71	132	346-525	380-575	0,06	0,06	31	29
	80	150	346-525	380-575	0,06	0,06	31	34
	90	169	346-525	380-575	0,22	0,19	91	77
	100	187	346-525	380-575	0,22	0,18	91	87
	112	210	346-525	380-575	0,20	0,18	97	103
	132	250	346-525	380-575	0,33	0,25	124	148
	160-200	300	346-525	380-575	0,5	0,56	247	360
3~△	63	118	200-303	220-332	0,12	0,10	28	28
	71	132	200-303	220-332	0,11	0,10	31	29
	80	150	200-303	220-332	0,11	0,10	31	34
	90	169	200-303	220-332	0,38	0,33	91	77
	100	187	200-303	220-332	0,37	0,31	91	87
	112	210	200-303	220-332	0,35	0,31	97	103
	132	250	200-303	220-332	0,58	0,44	124	148
	160-200	300	200-303	220-332	0,87	0,93	247	360

mit b-seitigem Referenzlagerschild /with bearing shield of reference on side b /avec de référence flasque latérale b / placa de referencia en el lado b /con targhetta cuscinetti di riferimento lato b

Spannungseinsatzbereich, Baureihe IL / ILI
Range of operating voltage, type IL / ILI
Intervalle de mises sous tension, version IL / ILI
Rango de ajuste de tensión, variante de serie IL / ILI
Campo di applicazione della tensione, serie IL / ILI

Drehstrommotor, zweipolig 3~230V/400V **ILI**
Three phase alternating current motor, bipolar 3~230V/400V **ILI**
Moteur à courant triphasé, bipolaire 3~230V/400V **ILI**
Motor trifásico, dos polos 3~230V/400V **ILI**
Motore a corrente trifase, a due poli 3~230V/400V **ILI**

Betriebsart / Mode / Couplage / Modo de funcionamiento / Modalità operativa	Bg / Frame size / HA / Tamaño / mod.	Lüfterdurchmesser / Blower diameter / Diamètre des ventilateurs / Diametro del ventilatore / Diametro del ventilatore	Spannungsbereich / Range of voltage / Plage de tension / Rango de tensiones / Campo di tensione		Max. zulässiger Strom / Max. permissible current / Courant max. admissible / Corriente máxima permitida / Corrente massima consentita		max. Leistungsaufnahme / max. power input / max. puissance absorbée / Consumo máxima de energía / Potenza massima assorbita	
		(mm)	50Hz (V)	60Hz	50Hz (A)	60Hz	50Hz (W)	60Hz
1~ ⊥(△)	63	118	230-277	230-277	0,18	0,21	46	54
	71	132	230-277	230-277	0,18	0,21	48	56
	80	150	230-277	230-277	0,19	0,22	48	59
	90	169	220-277	220-277	0,29	0,23	59	61
	100	187	220-277	220-277	0,29	0,28	62	73
	112	210	220-277	220-277	0,27	0,36	64	88
	132	250	230-277	230-277	0,52	0,61	125	163
	160-200	300	230-277	230-277	1,05	1,52	246	390
3~ Y	63	118	346-525	380-575	0,09	0,08	28	29
	71	132	346-525	380-575	0,09	0,07	29	28
	80	150	346-525	380-575	0,09	0,07	33	36
	90	169	346-525	380-575	0,22	0,18	78	71
	100	187	346-525	380-575	0,21	0,18	80	80
	112	210	346-525	380-575	0,20	0,17	87	93
	132	250	346-525	380-575	0,37	0,32	160	180
	160-200	300	346-525	380-575	0,74	0,62	314	391
3~△	63	118	200-303	220-332	0,15	0,14	28	29
	71	132	200-303	220-332	0,15	0,13	29	28
	80	150	200-303	220-332	0,16	0,13	33	36
	90	169	200-303	220-332	0,39	0,32	78	71
	100	187	200-303	220-332	0,37	0,30	80	80
	112	210	200-303	220-332	0,35	0,29	87	93
	132	250	200-303	220-332	0,64	0,55	160	180
	160-200	300	200-303	220-332	1,28	1,08	314	391

mit b-seitigem Referenzlagerschild /with bearing shield of reference on side b /avec de référence flasque latérale b / placa de referencia en el lado b /con targhetta cuscinetti di riferimento lato b

27.08.2018, LM

Spannungseinsatzbereich, Baureihe IL / ILI
Range of operating voltage, type IL
Intervalle de mises sous tension, version IL
Rango de ajuste de tensión, variante de serie IL
Campo di applicazione della tensione, serie IL

Drehstrommotor, vierpolig 3~230V/400V**, IL**
Three phase alternating current motor, quadripolar 3~230V/400V**, IL**
Moteur à courant triphasé, quadripolare 3~230V/400V**, IL**
Motor trifásico, cuatro polos 3~230V/400V**, IL**
Motore a corrente trifase, a quattro poli 3~230V/400V**, IL**

Betriebsart / Mode / Couplage / Modo de funcionamiento / Modalità operativa	Bg / Frame size / HA / Tamaño / mod.	Lüfterdurchmesser / Blower diameter / Diamètre des ventilateurs / Diametro del ventilatore / Diametro del ventilatore	Spannungsbereich / Range of voltage / Plage de tension / Rango de tensiones / Campo di tensione			Max. zulässiger Strom / Max. permissible current / Courant max. admissible / Corriente máxima permitida / Corrente massima consentita		max. Leistungsaufnahme / max. power input / max. puissance absorbée / Consumo máxima de energía / Potenza massima assorbita	
		(mm)	50Hz	(V)	60Hz	50Hz	(A) 60Hz	50Hz	(W) 60Hz
1~ ⊥(△)	90	169	230-277		230-277	0.16	0.16	40	40
	100	187	230-277		230-277	0.16	0.16	40	41
	112	210	230-277		230-277	0.16	0.16	41	42
	132	250	230-277		230-277	0.28	0.26	61	67
	160-200	300	230-277		230-277	0.45	0.43	93	112
3~ Y	90	169	346-525		380-575	0.10	0.09	51	47
	100	187	346-525		380-575	0.10	0.09	51	48
	112	210	346-525		380-575	0.10	0.09	51	51
	132	250	346-525		380-575	0.21	0.19	81	67
	160-200	300	346-525		380-575	0.35	0.31	118	104
	204-249	375	346-525		380-575	0.35	0.43	170	262
			346-690	*	380-690	0.64	0.44	285	285
	250-450	470	346-525		380-575	0.59	0.83	321	505
			346-690	*	380-690	1.13	0.82	454	540
3~△	90	169	200-303		220-332	0.18	0.16	51	47
	100	187	200-303		220-332	0.17	0.16	51	48
	112	210	200-303		220-332	0.17	0.16	51	51
	132	250	200-303		220-332	0.38	0.33	81	67
	160-200	300	200-303		220-332	0.62	0.54	118	104
	204-249	375	200-400		220-400	1.10	0.76	285	285
			200-400	*	220-400	1.10	0.76	285	285
	250-450	470	200-400		220-400	1.95	1.42	454	540
			200-400	*	220-400	1.95	1.42	454	540

*Variante bis 690V ohne UL-Zulassung
*Version up to 690V without UL-certification

Hinweis: Bg204 > ohne Stufenrohr mit Lüfter 375mm
Bg249 > wie Bg250 jedoch noch mit Lüfter 375mm

20.04.18, LM

Drehstrommotor, vierpolig 3~230V/400V**, ILI**
Three phase alternating current motor, quadripolar 3~230V/400V**, ILI**
Moteur à courant triphasé, quadripolare 3~230V/400V**, ILI**
Motor trifásico, cuatro polos 3~230V/400V**, ILI**
Motore a corrente trifase, a quattro poli 3~230V/400V**, ILI**

Betriebsart Mode Couplage Modo de funcionamiento Modalità operativa	Bg Frame size HA Tamaño mod.	Lüfterdurchmesser Blower diameter Diamètre des ventilateurs Diametro del ventilatore Diametro del ventilatore	Spannungsbereich Range of voltage Plage de tension Rango de tensiones Campo di tensione	Max. zulässiger Strom Max. permissible current Courant max. admissible Corriente máxima permitida Corrente massima consentita	max. Leistungsaufnahme max. power input max. puissance absorbée Consumo máxima de energía Potenza massima assorbita
		(mm)	50Hz (V) 60Hz	50Hz (A) 60Hz	50Hz (W) 60Hz
1~ ⊥(△)	90	169	230-277 230-277	0,16 0,16	40 40
	100	187	230-277 230-277	0,17 0,17	41 41
	112	210	230-277 230-277	0,17 0,17	42 43
	132	250	230-277 230-277	0,33 0,23	48 53
	160-200	300	230-277 230-277	0,34 0,29	59 71
3~ Y	90	169	346-525 380-575	0,10 0,09	51 47
	100	187	346-525 380-575	0,10 0,09	55 53
	112	210	346-525 380-575	0,10 0,10	56 56
	132	250	346-525 380-575	0,24 0,21	67 55
	160-200	300	346-525 380-575	0,25 0,21	84 86
	204-249	375	346-525 380-575	0,31 0,34	154 223
			346-690 * 380-690	0,53 0,36	238 247
	250-450	470	346-525 380-575	0,42 0,61	254 396
			346-690 * 380-690	0,77 0,61	330 415
3~△	90	169	200-303 220-332	0,18 0,16	51 47
	100	187	200-303 220-332	0,17 0,16	55 53
	112	210	200-303 220-332	0,17 0,16	56 56
	132	250	200-303 220-332	0,42 0,36	67 55
	160-200	300	200-303 220-332	0,43 0,37	84 86
	204-249	375	200-400 220-400	0,91 0,62	238 247
			200-400 * 220-400	0,91 0,62	238 247
	250-450	470	200-400 220-400	1,34 1,06	330 415
			200-400 * 220-400	1,34 1,06	330 415

*Variante bis 690V ohne UL-Zulassung
*Version up to 690V without UL-certification

Hinweis: Bg204 > ohne Stufenrohr mit Lüfter 375mm
Bg249 > wie Bg250 jedoch noch mit Lüfter 375mm

mit b-seitigem Referenzlagerschild
with bearing shield of reference on side b
avec de référence flasque latérale b
placa de referencia en el lado b
con targhetta cuscinetti di riferimento lato b

20.04.18, LM